LAGUNA

OPERATION MAUNAL & PARTS LIST

OSCILLATING EDGE BELT SANDER (MSANOES9x139-5-0145)

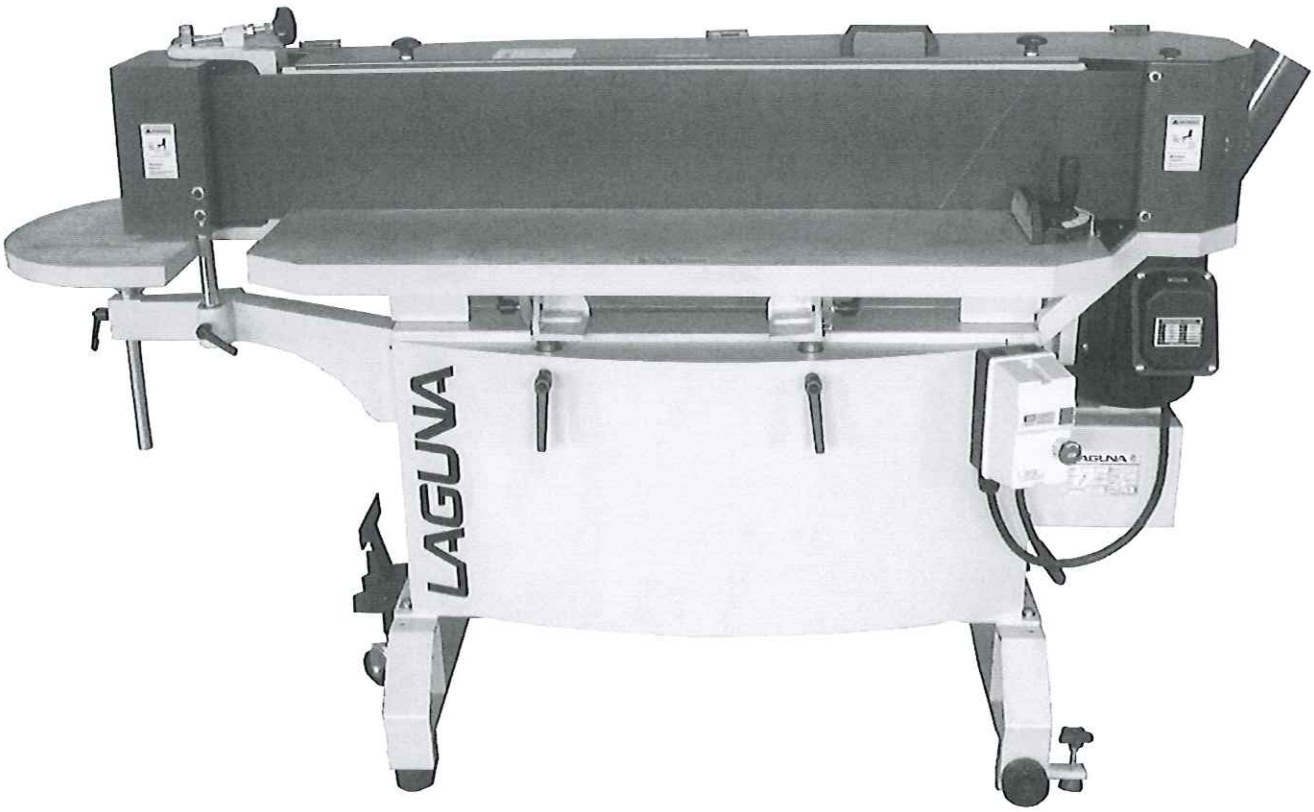

WARNING :

The Operator must thoroughly Read and understand this Manual before operating the Dust collector or commencing Any servicing. Care should be Taken to follow all safety rules And warning instructions.

CAUTION	
	Read and understand operator's manual before using this machine. Failure to follow operating instructions could result in death or serious injury.
	Loud noise hazard. Ear protection is required when operating this machine.
	Flying objects hazard. Eye peotection is required when operating this machine.
	Respiratory hazard. Wear approved respirator in this area.

READ THIS MANUAL CAREFULLY BEFORE ASSEMBLY, TESTING & OPERATING

Limited Warranty

New machines and accessories sold by Laguna Tools carry a one-year warranty effective from the date of shipping. Machines sold through dealers must be registered with Laguna Tools within 30 days of purchase to be covered by this warranty. Laguna Tools guarantees all new machines and accessories sold to be free of manufacturers' defective workmanship, parts and materials. We will repair or replace, without charge, any parts determined by Laguna Tools, Inc. to be a manufacturer's defect. We require that the defective item/part be returned to Laguna Tools with the complaint. Any machines returned to Laguna Tools must be returned with packaging in the same manner in which it was received. If a part or blade is being returned it must have adequate packaging to ensure no damage is received during shipping. In the event the item/part is determined to be damaged due to lack of maintenance, cleaning or misuse/abuse, the customer will be responsible for the cost to replace the item/part, plus all related shipping charges. This limited warranty does not apply to natural disasters, acts of terrorism, normal wear and tear, product failure due to lack of maintenance or cleaning, damage caused by accident, neglect, lack of or inadequate dust collection, misuse/abuse or damage caused where repair or alterations have been made or attempted by others.

Laguna Tools, Inc. is not responsible for additional tools or modifications sold or performed (other than from/by Laguna Tools, Inc.) on any Laguna Tools, Inc. machine. Warranty maybe voided upon the addition of such described tools and/or modifications, determined on a case-by-case basis.

Software purchased through Laguna Tools Inc. is not covered under this warranty and all technical support must be managed through the software provider. Software is non-refundable.

Normal user alignment, adjustment, tuning and machine settings are not covered by this warranty. It is the responsibility of the user to understand basic machinery operation, settings and procedures and to properly maintain the equipment in accordance with the standards provided by the manufacturer.

Parts, under warranty, are shipped at Laguna Tools, Inc.'s cost either by common carrier, FEDEX ground service or a similar method. Technical support to install replacement parts is primarily provided by phone, fax, e-mail or Laguna Tools Customer Support Website. The labor required to install replacement parts is the responsibility of the user.

Laguna Tools is not responsible for damage or loss caused by a freight company or other circumstances not in our control. All claims for loss or damaged goods must be notified to Laguna Tools within twenty-four hours of delivery. Please contact our Customer Service Department for more information.

Only **new** machines sold to the original owner are covered by this warranty.
For warranty repair information, **call 1-800-332-4094**.

TABLE OF CONTENTS

1. SAFETY INSTRUCTION 1-1

1.1 SAFETY REGULATIONS 1-1

1.1.1 GENERAL SAFETY RULES 1-1

1.1.2 ADDITIONAL SAFETY RULES FOR OSCILLATING BELT EDGE SANDER 1-2

2. SPECIFICATIOINS 2-1

2.1 SPECIFICATIOINS 2-1

2.2 FUNCTION OF THE MACHINE 2-1

2.3 LEGEND OF THE MACHINE 2-2

3. INSTALLATION 3-1

3.1 SAFETY RULES FOR MACHINE LIFTING 3-1

3.2 SELECTION OF LOCATION 3-1

3.3 LIFTING THE MACHINE 3-1

3.4 INSTALLATION AND LEVELLING 3-2

3.5 POWER SUPPLY REQUIREMENT 3-2

3.6 CONNECT POWER SOURCE WIRES 3-3

3.7 CHECK POWER WIRES CONNECTION 3-3

3.8 CONNECT DUST COLLECTION SYSTEM 3-4

4. OPERATION 4-1

4.1 SWITCHES FUNCTION ON ELECTRICAL CONTROL BOX 4-1

4.2 REPLACE THE SANDING BELTS 4-1

4.3ADJUST THE SANDING BELT 4-2

4.4 WORKING TABLE POSITION ADJUSTMENT 4-2

4.5 WORKING TABLE TILING TO SLANT ANGLE ADJUSTMENT 4-3

4.6 ADJUST THE MITER GAUGE ON THE WORKING TABLE 4-3

4.7 CURVED SANDING 4-4

4.8 CORNER TABLE POSITION ADJUSTMENT 4-4

4.9 CORNER TABLE TILTING TO SLANT ANGLE ADJUSTMENT 4-4

5. MAINTEANCE 5-1

5.1 PERIODIC MAINTENANCE 5-1

5.2 RECOMMENDED SPARE PARTS 5-1

5.3 PARTLIST 5-2

6. ELECTRIC 6-1

6.1 SAFETY RULES FOR ELECTRICAL CONTROL SYSTEM 6-1

6.2 INSTALLATION DIAGRAM 6-2

6.3 ELECTRICAL COMPONENTS 6-3

6.4ELECTRICAL WIRING DIAGRAM 6-4

1.1. SAFETY REGULATIONS

1.1.1. GENERAL SAFETY RULES

⚠ WARNING Do not attempt to operate until you have read thoroughly and understand completely all instructions, rules, etc. contained in this manual. Failure to comply can result in accidents involving fire, electric shock, or serious personal injury. Keep owners manual and review frequently for continuous safe operation.

1. **KNOW YOUR MACHINE.**
   For your own safety, read the owner's manual carefully. Learn its application and limitations as well as specific potential hazards pertinent to this machine.

2. **KEEP GUARDS IN PLACE AND IN WORKING ORDER.**

3. **REMOVE ADJUSTING KEYS AND WRENCHES.**
   For habit of checking to see that keys and adjusting wrenches are remove from the machine before turning it on.

4. **KEEP WORK AREA CLEAN.**
   Cluttered areas and benches invite accidents.

5. **DO NOT USE IN DANGEROUS ENVIRONMENTS.**
   Do not use power tools in damp or we locations, or expose them to rain. Keeps work area well illuminated.

6. **KEEP CHILDREN AWAY.**
   All visitors should be kept at a safe distance from work area.

7. **MAKE WORKSHOP CHILDPROOF.**
   With padlocks, master switches, or by removing starter keys.

8. **DO NOT FORCE THE MACHINE.**
   It will do the job better and be safer at the rate for which it was designed.

9. **USE THE RIGHT TOOLS.**
   Do not force the machine or attachments to do a job for which they were not designed.

10. **WEAR PROPER APPAREL.**
    Avoid loose clothing, gloves, neckties, rings, bracelets, or jewelry, which could be caught in moving parts. Nonslip footwear is recommended. Wear protective hair covering to contain long hair.

11. SECURE WORK.

Use clamps or a vice to hold work when practical. It is safer than using your hand and frees both hands to operate the machine.

12. DO NOT OVERREACH.

Keep proper footing and balance at all times.

13. MAINTAIN MACHINE IN TOP CONDITION.

Keep machine clean for best and safest performance. Follow instructions for lubricating and changing accessories.

14. DISCONNECT MACHINE FROM POWER SOURCE.

Before servicing and when changing accessories, or when mounting and remounting motor.

15. USE RECOMMENDED ACCESSORIES.

Consult the owner's manual for recommended accessories.

16. NEVER LEAVE MACHINE RUNNING UNATTENDED. TURN POWER OFF.

17. Protective guards and shields must be in place at all times unless that specific part requires servicing.
18. Never clean or remove chips while the machine is running.
19. Do not remove or alter warning labels and replace any that become obscured.

1.1.2. ADDITIONAL SAFETY RULES FOR OSCILLATING BELT EDGE SANDER

1. Never stand directly in line of workpiece sanding; as throw out is a possibility always stands to one side of your machine.
2. Keep guards in place when the sanding belt surface is not use.
3. Do not perform sanding operations until the dust collection system is started.
4. Do not place hands above the sanding unit.
5. Properly ground the machine.
6. Do not open the guards while the machine is running.

2.1. SPECIFICATIONS

MODEL	·120E
Working capacity	200(W) x1200mm (L)
Sanding belt size	230(W) x3520mm (L)
Belt linear speed	(50HZ) 910 m/min (60HZ) 1080 m/min
Belt drive motor	2.2 Kw
Oscillating drive motor	-
Caliber of dust collector	4"(Ø100) x1
Machine dimensions (L x W x H)	2100x620x1020 mm
Net weight	230kg

All specifications, dimensions and design characteristics shown in this manual are subject to change without notice.

2.2. FUNCTION OF THE MACHINE

This oscillating belt edge sander is designed and manufactured for long-term operation, creating superior sanding surface results for wood products. New design of oscillation belt system- combination of main motor with gear device. Allow for sanding on edges, plane surfaces, rims and curved surfaces, providing the right function for specific jobs.

The machine consists of the machine frame, the sanding unit, the working table and the corner table. The sanding unit extremely easy to replace and adjust sanding belt, The working table for versatile vertical oscillating edge sanding and the corner table for curved corner sanding. All tables equipped with tilting and adjustable height devices. So it is variable to meet various types of workpiece requirement.

⚠ WARNING

This machine is suited for sanding wood products only. Do not use this machine for sanding metal products.

2.3. LEGEND OF THE MACHINE

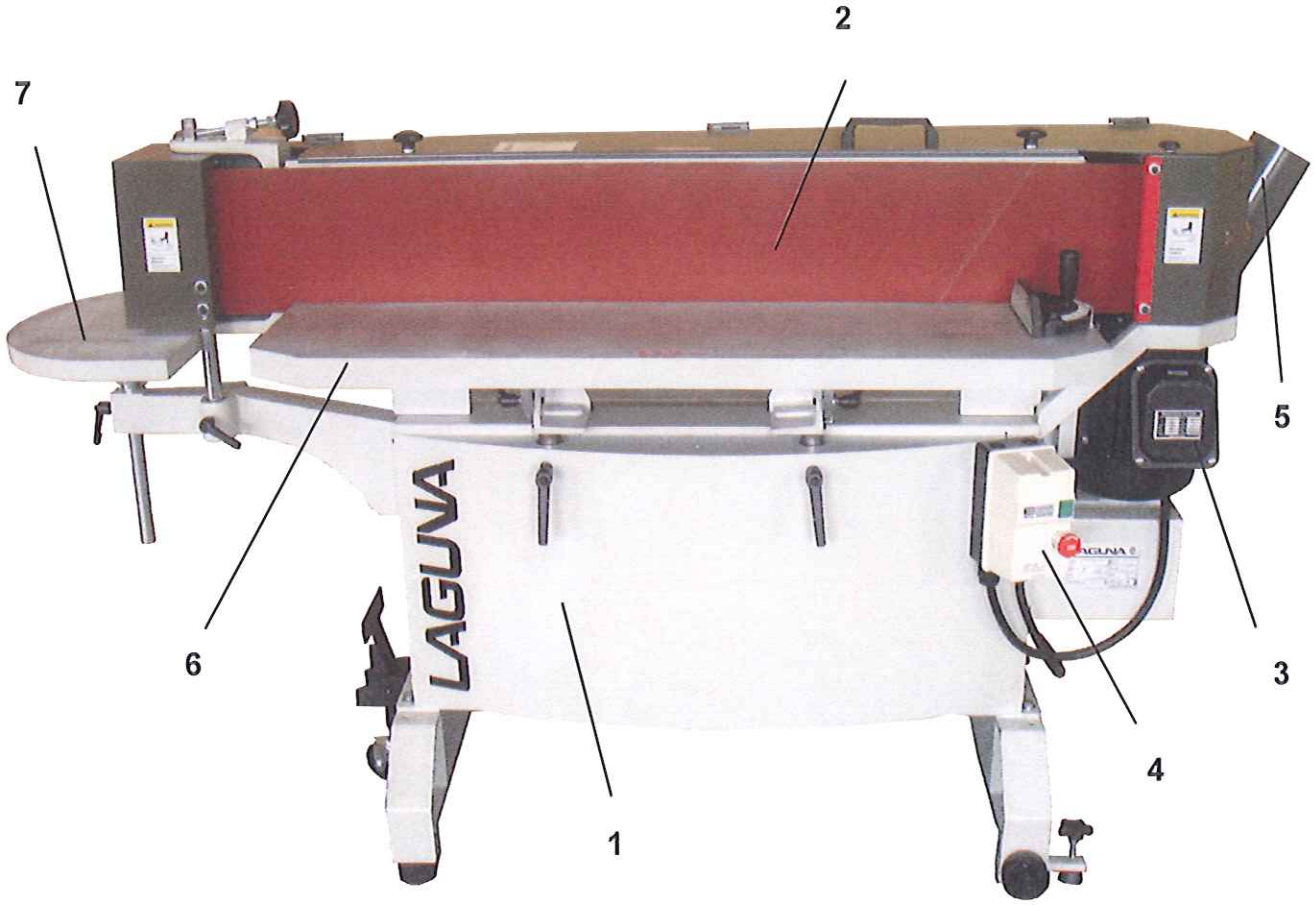

1. Machine Base
2. Sanding Unit
3. Sanding Belt Driver Motor
4. Electrical Control Box
5. Dust Hood
6. Sanding Working Table
7. Corner Sanding Table

3.1. SAFETY RULES FOR MACHINE LIFTING

1. Pay special attention to the balance of the machine while lifting.
2. Use a forklift or a hydraulic hand pallet truck with sufficient loading capacity to lift the machine.
3. Have another person help guide the way when lifting the machine.
4. The forks of forklift must protrude from under the machine underside.
5. **The forklift must only be driven by an experienced forklift driver.**

3.2. SELECTION OF LOCATION

Requirement of operating environment the operating temperature for this machine should be between +5℃ and +40℃ ,while the relative humidity should not exceed 50% at a maximum temperature of +40℃.

3.3. LIFTING THE MACHINE

1. The machine should be lifted with steel cable or a hydraulic hand pallet truck. There are two lifting rings located at the front and rear of the machine.
2. Make sure the steel cable used is strong enough that it won't break during lifting.
3. Their forks should insert through the machine bottom.
4. Attention should be paid to the balance of the machine while lifting.
5. The weight of the machine is listed below.

Machine weight	Forklift or hydraulic hand pallet truck capacity
230Kg	500 kg

☞ When lowering the machine to the floor, it must be done slowly and carefully. Do not let the machine jolt against the floor. And replace the lifting rings (A) with star knobs (B).

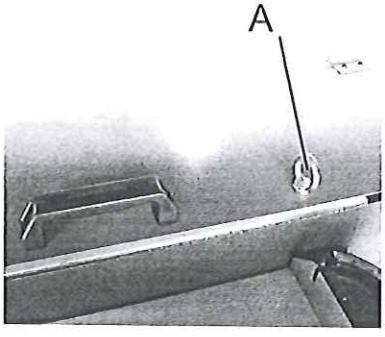

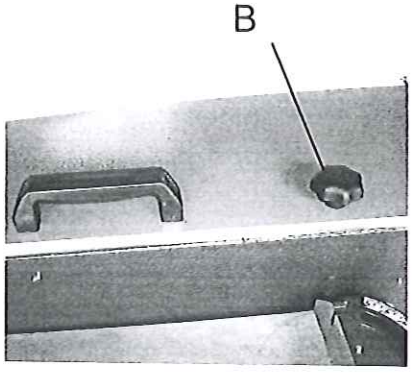

3.4. INSTALLATION AND LEVELLING

Install this machine on a solid and level concrete floor. Leave proper space around the machine for handling the materials to be machined. Four rubber pads are furnished with the machine, which are to be placed under the machine at the Four Corners.

After the machine has been located at a proper work site, proper leveling needs to be made. The following steps should be taken:

1. Screw the rubber pads (A) under the machine.
2. Adjust the leveling screws until proper leveling is obtained.

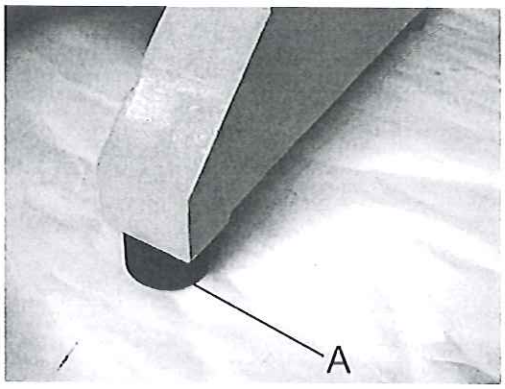

3.5. POWER SUPPLY REQUIREMENT

Insufficient voltage from factory power source may affect the power output of the motor.

It is important to connect this machine to the correct voltage in the factory power source. Use only an independent power source.

Table for power supplies requirement:

Kw	Voltage	Current	Breaker capacity	Wire size
2.2Kw	220V, 60Hz, 1~	18A	30A	5.5mm^2

3.6. CONNECT POWER SOURCE WIRES

1. Before connecting the power wires make sure the voltage between the machine and your factory power source is the same.
2. Connect the power wires to the breaker.
3. The machine must be properly grounded to prevent possible injury from electrical shock.
4. **Qualified electrical personnel should perform all electrical connections.**

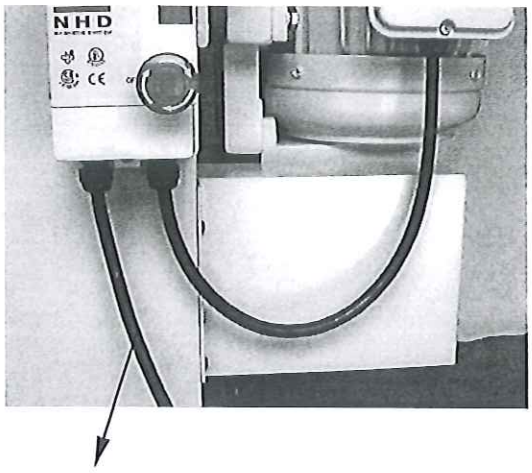

Connect to the Breaker

⚠ WARNING

Grounding should be based on the local regulations.

3.7. CHECK SANDING BELT ROTATE DIRECTION

After the power wires have been connected it is necessary to check the sanding belt rotate direction.

Press the sanding belt drive motor start switch (A) then the sanding belt should rotate according to the indicant (B) direction. If not, **please inform our technical service immediately**.

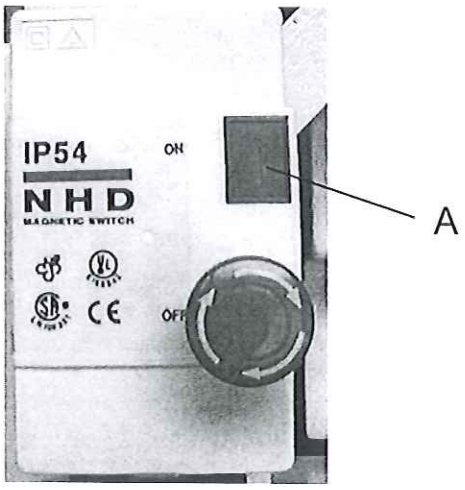

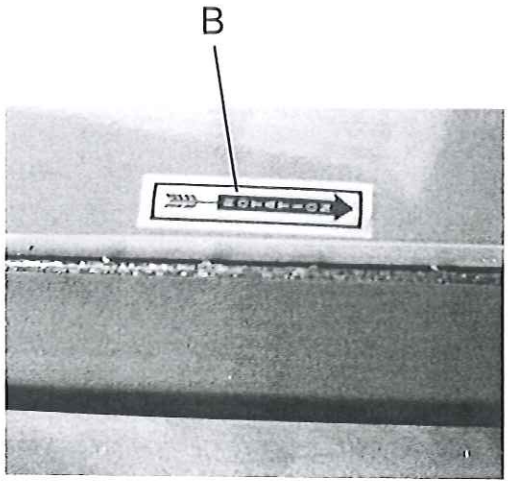

3.8. CONNECT DUST COLLECTION SYSTEM

1. There are two dust hoods (A.B) provided on the machine for sucking dust from the sanding units.
2. Fit the flexible hose to the dust hood and connect it to the dust collector.
3. The outlet diameters for dust hoods are 100mm(4").

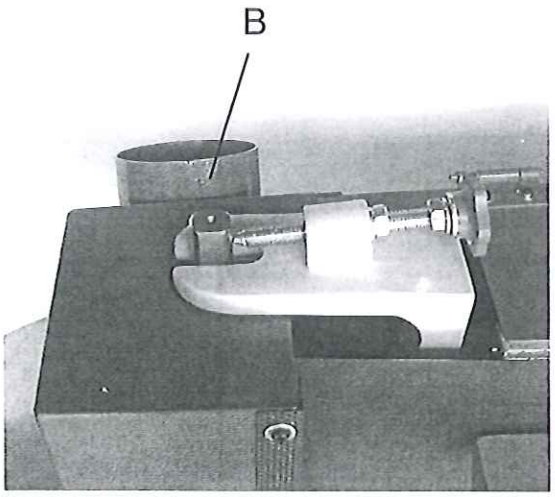

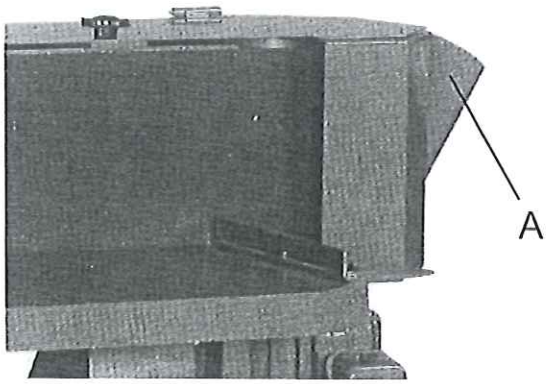

⚠ WARNING

Do not perform sanding operations until the dust collection system is started.

4.1. SWITCHES FUNCTION ON ELECTRICAL CONTROL BOX

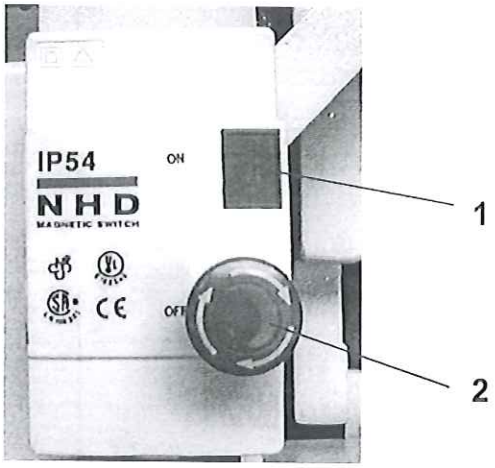

SWITCH FUNCTION:

1. **SANDING BELT START SWITCH:**

   Press this switch for starting the sanding belt.

2. **EMERGENCY STOP / SANDING BELT STOP SWITCH:**

   During machining, if any malfunction occurs, press this switch to stop the sanding belt. When restarting machine remember to turn this switch to the right to release it.

4.2. REPLACE THE SANDING BELTS

1. Disconnect the machine from power source.
2. Open the guard on the sanding unit.
3. Shift the sanding belt lever (A) to release the sanding belt tension according to the indicant direction.
4. Take out the old sanding belt.
5. Replace the new sanding belt.
6. Shift the sanding belt lever (A) to tighten the sanding belt tension according to the indicant direction.
7. Make the sanding belt adjustment. (See instructions show on adjust the sanding belt procedures. 4.3)
8. Close the guards.

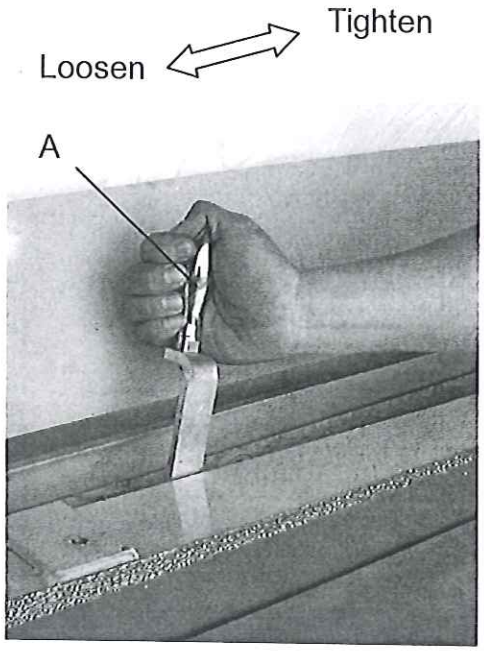

4.3. ADJUST THE SANDING BELT

After the sanding belt has been replaced it is the necessary to check the sanding belt the middle of the drive roller. If not, must the sanding belt adjustment.

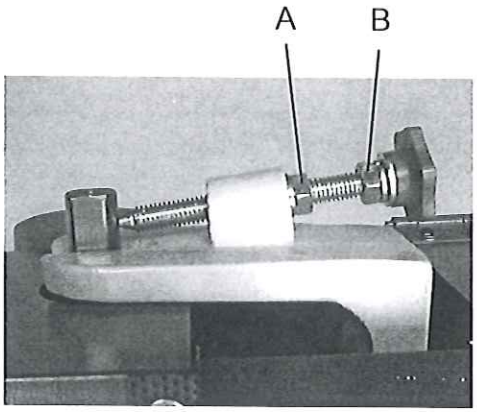

1. Loosen the fix nut (A).
2. Turn the adjustment knob (B) counter-clockwise then the sanding belt should move upward.
3. Turn the adjustment knob (B) clockwise then the sanding belt should move downward.
4. After adjustment tighten fix nut (A).

4.4. WORKING TABLE POSITION ADJUSTMENT

The table can be adjusted position according to different workpiece thickness and sanding belt sharp conditions.

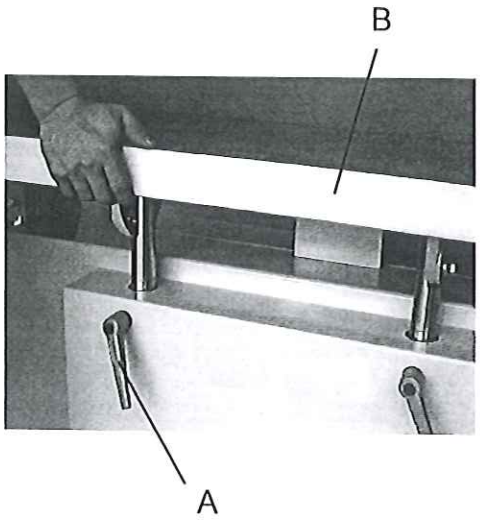

Because the table is designed a special balance mount, so we can be easily adjusted simply be hand to push or pull.

Adjusted as follows:

1. Loosen the adjustable hand lever (A).
2. Move the table (B) into the desired position by hand.
3. Tighten the adjustable hand lever (A). After the table position is desired.

4.5. WORKING TABLE TILTING TO SLANT ANGLE ADJUSTMENT

The working table angle can be adjusted tilting angle according to different workpiece angle adjust as follows:

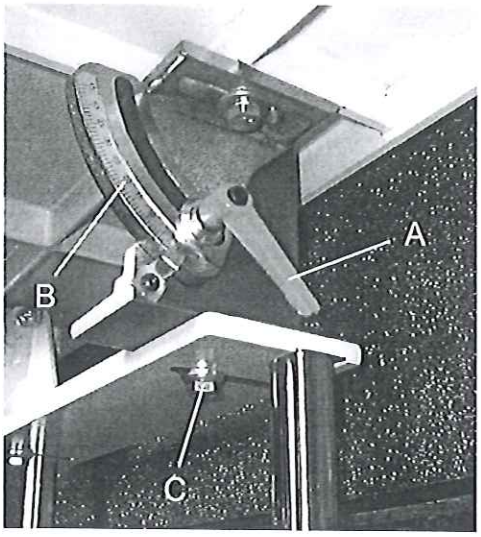

1. Put the workpiece on the working table.
2. Loosen the hand levers (A) on the both sides.
3. Swivel the table into the desired position with the workpiece or by reading the indictor scale (B).
4. Tighten the hand levers (A). After the table slant angle is desired.
5. The working table can be adjusted clearance with sanding belt. If it is required, loosen the fix screws (C) then move the working table to desire position. After adjustment, re-tighten the fix screw.

4.6. ADJUST THE MITER GAUGE ON THE WORKING TABLE

The table can be adjusted the miter gauge (A) angle according to different workpiece tilting angle.

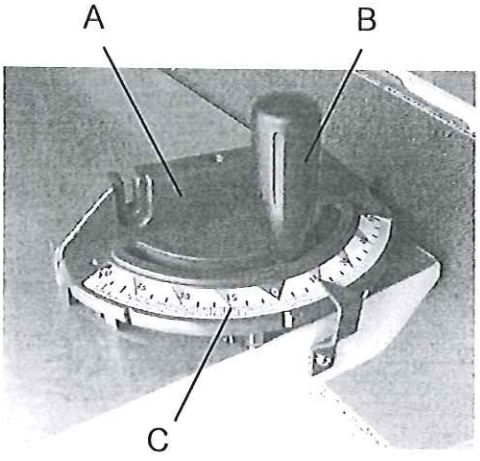

The miter gauge with easy-to–read graduation is precisely set on the working table for the convenience of sanding.

Adjusted as follows:

1. Loosen the lock handle (B).
2. Rotate the miter gauge into the desired position by reading the indictor scale (C).
3. Tighten the lock handle (B). After the miter gauge position is desired.

4.7. CURVED SANDING

This machine provided with corner sanding table for curved sanding. When use this function must be rotate the rear dust hood (A) to convenience position by loosen the hand lever (B).

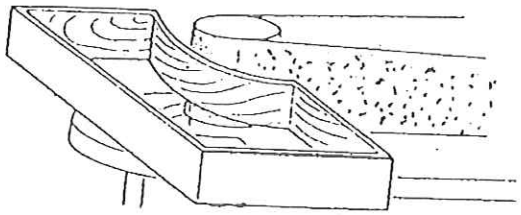

Curved sanding

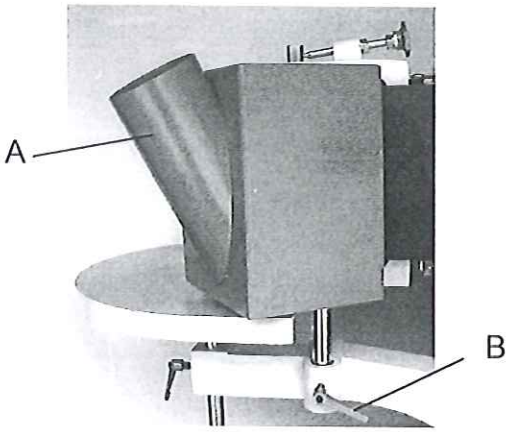

4.8. CORNER TABLE POSITION ADJUSTMENT

The corner table can be adjusted position according to different workpiece thickness and sanding belt sharp conditions.

Adjusted as follows:

1. Loosen the adjustable hand lever (A).
2. Move the table (B) into the desired position by hand.
3. Tighten the adjustable hand lever (A). After the table position is desired.

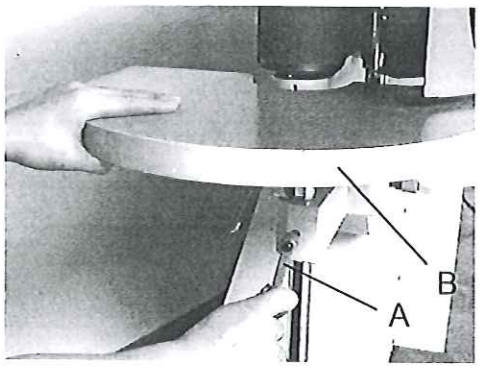

4.9. CORNER TABLE TILTING TO SLANT ANGLE ADJUSTMENT

The corner table angle can be adjusted tilting angle according to different workpiece angle adjust as follows:

1. Put the workpiece on the working table.
2. Loosen the fix bolt (A).
3. Swivel the table into the desired position with the workpiece.
4. Tighten the fix blot (A). After the table slant angle is desired.

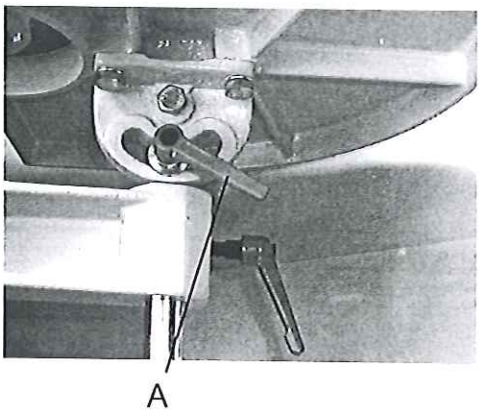

This machine is designed and manufactured for easy operation and maintenance. The proper amount of good quality grease is packed in all ball bearings, so not necessary lubrication.

The auxiliary wheel and the drive wheel are made by rubber material, after the machine has been operated for long period of time the auxiliary wheel and drive wheel may be wear. If this happens the auxiliary wheel and drive wheel needs to be replaced. When the auxiliary wheel is wear, we recommend replace all auxiliary wheel units.

5.1. PERIODIC MAINTENANCE

1. The machine requires thorough cleaning once a day.
2. Check of the auxiliary wheel and drive wheel.
3. Check of screws and bolts.

5.2. RECOMMENDED SPARE PARTS

1 Auxiliary wheel unit.

2 Drive wheel.

PARTLIST

	Machine base unit	91001020 2001/10/25

NO.	Description	Q'ty	NO.	Description	Q'ty
1	Machine base	1	41	Nut	2
2	Motor starter	1	42	Hand knobs	2
3	Cover	1	43	Eyebolts	2
4	Screw	4	44	Clipper(male)	1
5	Bracket	1	45	Clipper(Female)	1
6	Washer	2	46	Flat Head Socket Cap Screw,M3*6	4
7	Spring washer	2	47	Hand Knob,1/4″	2
8	Screw	2			
9	Rubber pad	4			
10	Washer	4			
11	Spring washer	4			
12	Nut	4			
13	Extend base	2			
14	Washer	4			
15	Screw	4			
16	Support base	1			
17	Washer	4			
18	Spring washer	4			
19	Screw	4			
20	Sanding belt	1			
21	Pad	1			
22	Plate	2			
23	Spring washer	6			
24	Screw	6			
25	Dust hood unit	1			
26	Bracket	1			
27	Washer	4			
28	Spring washer	4			
29	Screw	4			
30	Bracket	1			
31	Dust hood	1			
32	Guard plate	1			
33	Washer	3			
34	Spring washer	3			
35	Screw	3			
36	Guard plate	1			
37	Washer	2			
38	Screw	2			
39	"U" handle	1			
40	Screw	2			

91001020

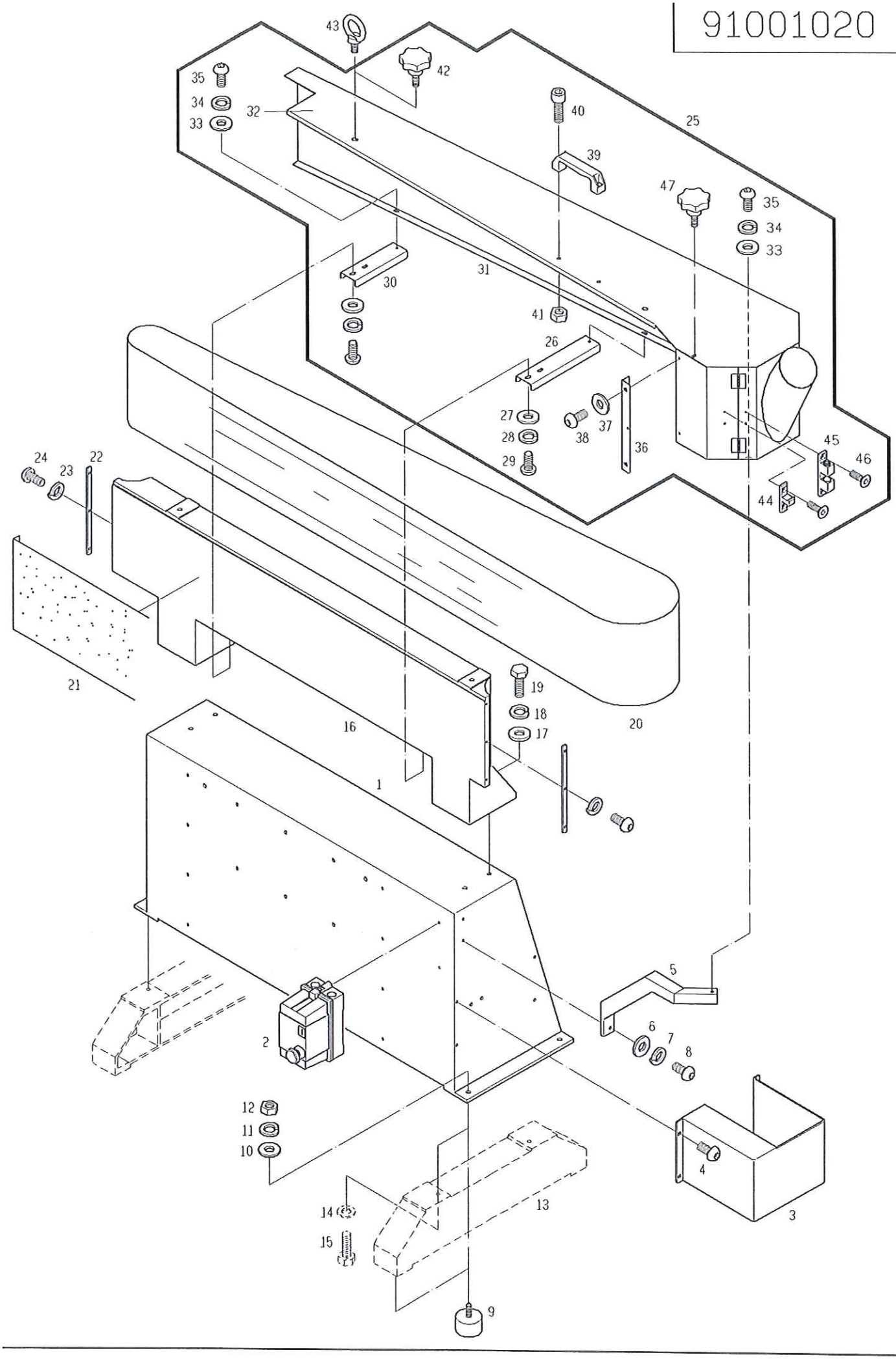
43
42
35
34
33
32
40
25
39
47
35
34
33
30
31
41
26
27
28
29
38
37
36
45
46
44
24
23
22
21
19
18
17
16
20
1
5
6
7
8
2
12
11
10
4
3
14
15
13
9

	Sanding belt follow-up unit	91014020
		2001/10/25

NO.	Description	Q'ty	NO.	Description	Q'ty
1	Shaft	2			
2	DU bush	4			
3	Stopper block	2			
4	Spring	2			
5	Plate	1			
6	Spring washer	2			
7	Screw	2			
8	Set screw	4			
9	Lever	1			
10	Hand knob	1			
11	Screw	1			
12	Spring washer	1			
13	Nut	1			
14	Screw	1			
15	Spring washer	1			
16	Bush	1			
17	Bearing	1			
18	Washer	2			
19	Nut	1			
20	Wheel adjustment unit	1			
21	Bracket	1			
22	Spherical bearing	1			
23	Washer	1			
24	Spring washer	1			
25	Screw	1			
26	Washer	2			
27	Spring washer	2			
28	Screw	2			
29	Spring washer	2			
30	Nut	2			
31	Screw	1			
32	Washer	1			
33	Knob	1			
34	Auxiliary wheel unit	1			
35	Shaft	1			
36	Bearing	2			
37	Roller	1			
38	Retaining ring	1			
39					
40					

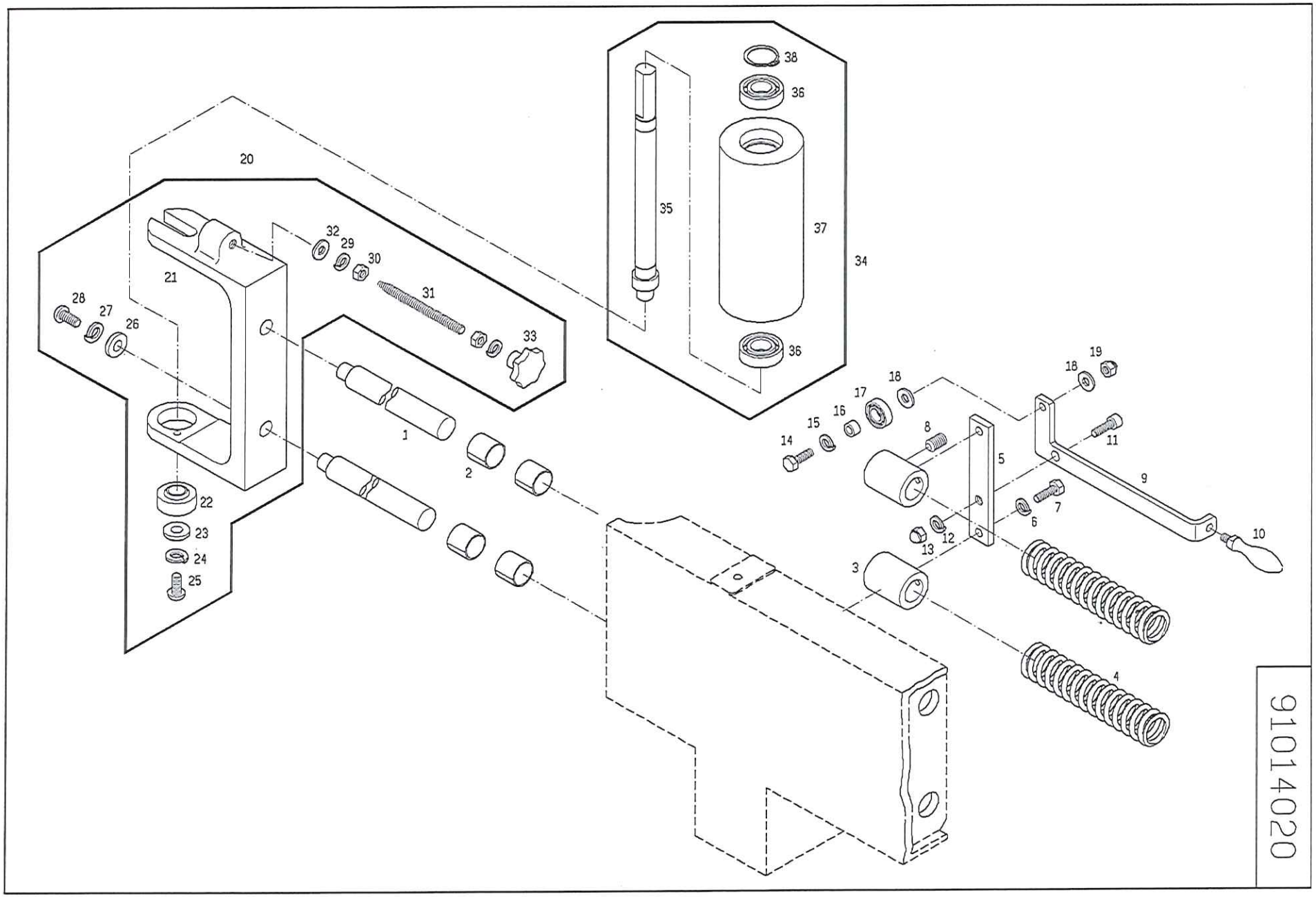
20
21
22
23
24
25
26
27
28
29
30
31
32
33
34
35
36
37
38
1
2
3
4
5
6
7
8
9
10
11
12
13
14
15
16
17
18
19
91014020

	Sanding belt driver unit	91014030
		2001/10/25

NO.	Description	Q'ty	NO.	Description	Q'ty
1	Pillow type ball bearing unit	2			
2	Washer	4			
3	Spring washer	4			
4	Screw	4			
5	Shaft	1			
6	Motor base	1			
7	Set screw	2			
8A	Motor	1			
9	Washer	4			
10	Spring washer	4			
11	Screw	4			
12A	Bracket	1			
13	Spring washer	2			
14	Screw	2			
15	Screw	4			
16	Oscillating unit	1			
17B	Reducer casing	1			
18	Bracket	1			
19	Washer	2			
20	Spring washer	2			
21	Screw	2			
22	Bearing housing	1			
23	Bearing	1			
24	Spherical bearing	1			
25	Spring washer	1			
26	Screw	1			
27	Spring washer	1			
28	Nut	1			
29	Spring washer	1			
30	Screw	1			
31	Cam	1			
32	Key	1			
33	Washer	1			
34	Spring washer	1			
35	Screw	1			
36	Drive wheel	1			
37	Washer	1			
38	Spring washer	1			
39	Screw	1			
40	Gear Reducer Packing	1			

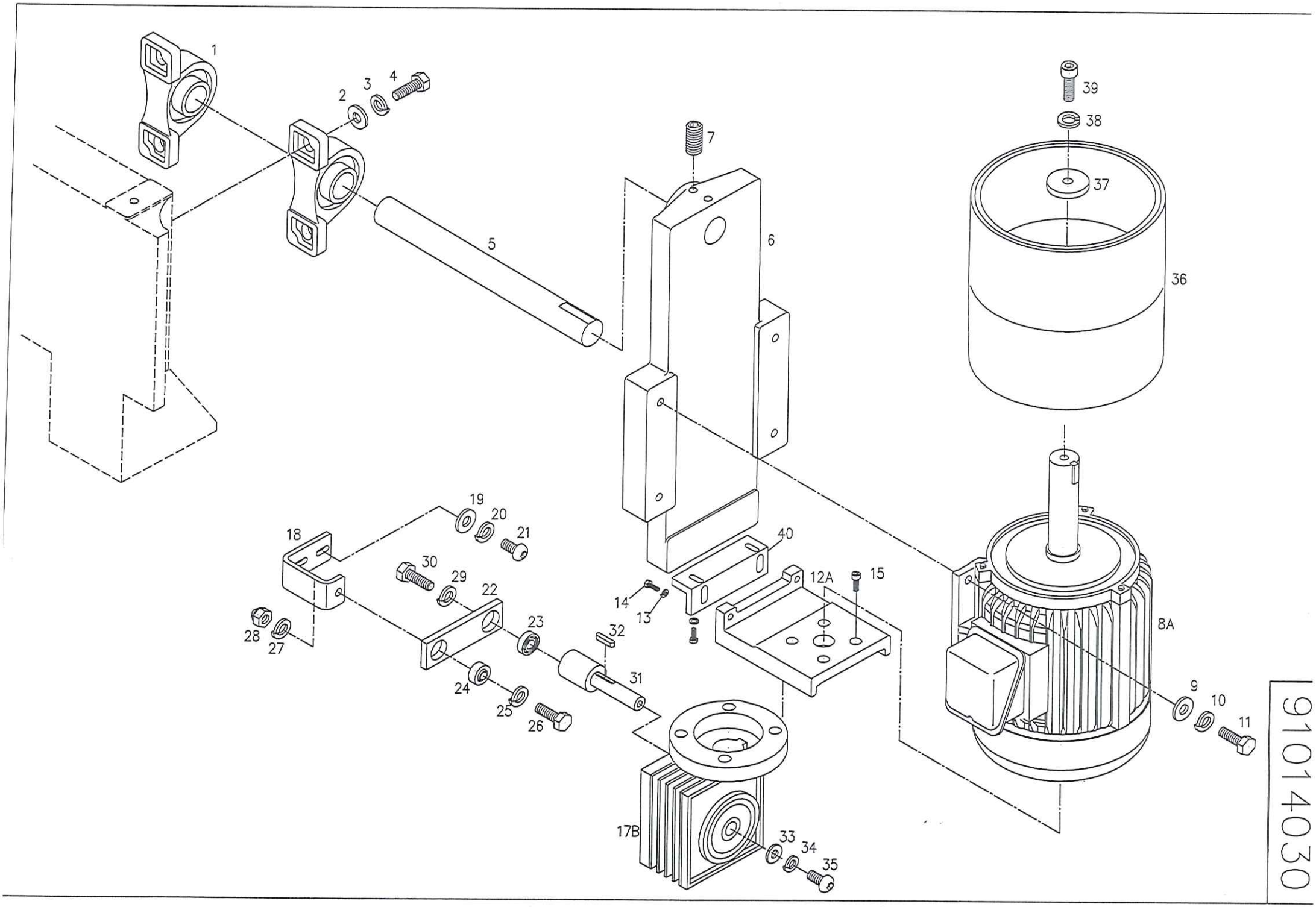
1
2
3
4
5
6
7
39
38
37
36
19
20
21
18
30
29
22
23
28
27
24
25
26
32
31
14
13
40
12A
15
8A
9
10
11
17B
33
34
35

9101403

	Outside table unit	91002030 2001/10/25

NO.	Description	Q'ty	NO.	Description	Q'ty
1	Elevation block	1	41	Miter gauge & dowel screw	1
2	DU bush	4	42	Lock Handle	1
3	Seal	4	43	Pointer	1
4	Shaft	2	44	Spring washer	2
5	Link	1	45	Screw	2
6	Screw	2	46	Cover	1
7	Spring	2	47	Screw	8
8	Washer	2	48	Adjustable hand lever	2
9	Spring washer	2			
10	Screw	2			
11	Screw	2			
12	Nut	2			
13	Spring washer	2			
14	Washer	6			
15	Spring washer	6			
16	Screw	6			
17	Adjustment plate	1			
18	Screw	2			
19	Washer	2			
20	Spring washer	2			
21	Screw	2			
22	Table unit	1			
23	Bracket (R)	1			
24	Adjustment base (R)	1			
25	Screw	2			
26	Spring washer	2			
27	Nut	2			
28	Washer	2			
29	Spring washer	2			
30	Adjustable hand lever	2			
31	Indicator scale	1			
32	Pointer	1			
33	Spring washer	1			
34	Screw	1			
35	Bracket (L)	1			
36	Adjustment base (L)	1			
37	Outside table	1			
38	Washer	2			
39	Spring washer	2			
40	Screw	2			

91002030

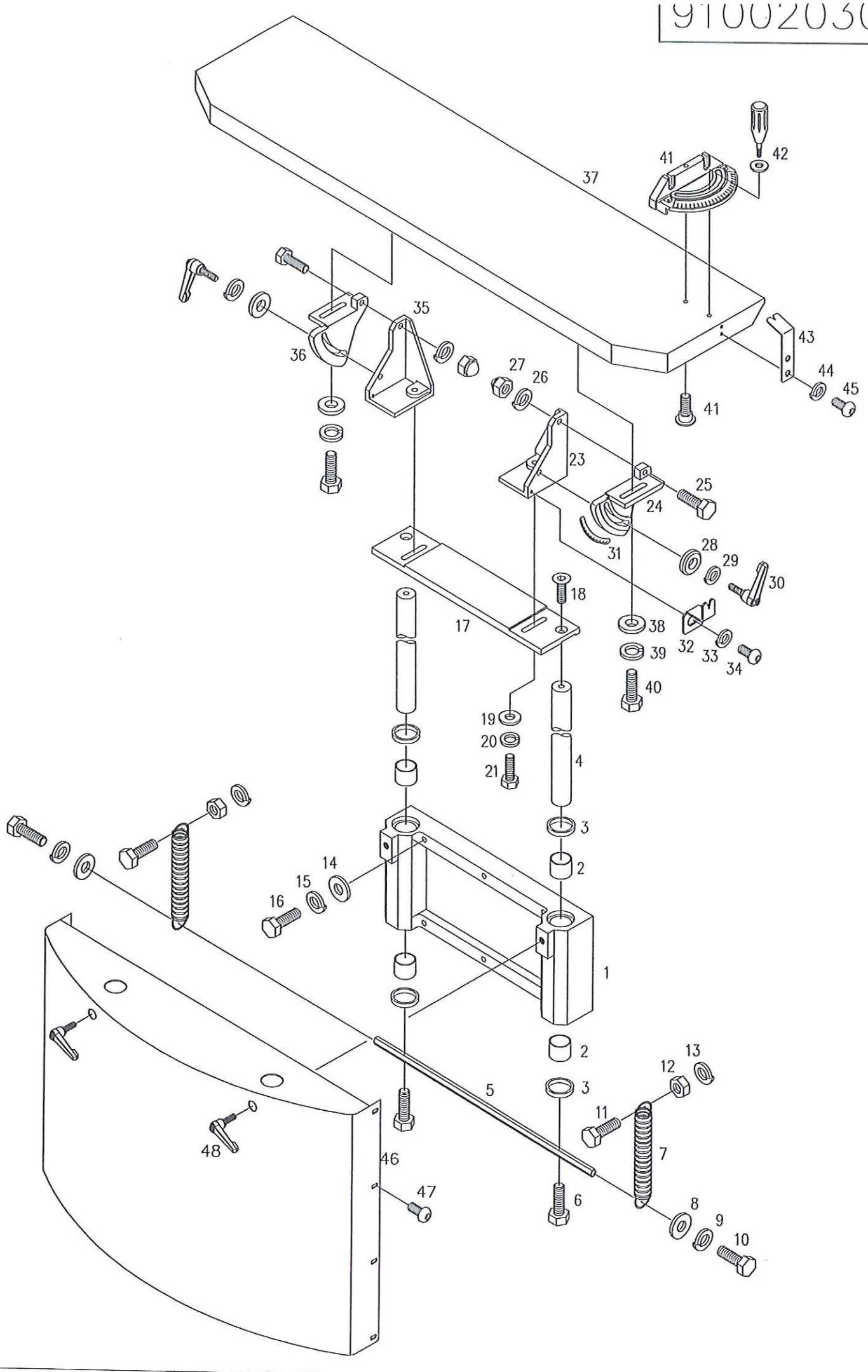

37
41
42
35
36
43
44
45
41
27
26
23
25
24
31
28
29
30
18
17
38
39
32
33
34
40
19
20
21
4
3
2
14
15
16
1
2
13
12
3
5
11
7
48
46
47
6
8
9
10

	Corner sanding table unit	91002040
		2001/10/25

NO.	Description	Q'ty	NO.	Description	Q'ty
1	Support Base	1			
2	Washer	2			
3	Spring washer	2			
4	Screw	2			
5	Adjustable hand lever	2			
6	Shaft	1			
7	Corner table unit	1			
8	Screw	1			
9	Spring washer	1			
10	Nut	1			
11	Washer	1			
12	Spring washer	1			
13	Screw	1			
14	Washer	2			
15	Spring washer	2			
16	Screw	2			
17	Adjustment base	1			
18	Corner sanding table	1			
19	Retaining ring	1			
20	Shaft	1			
21	Dust hood	1			
22	Washer	2			
23	Spring washer	2			
24	Screw	2			
25					
26					
27					
28					
29					
30					
31					
32					
33					
34					
35					
36					
37					
38					
39					
40					

91002040

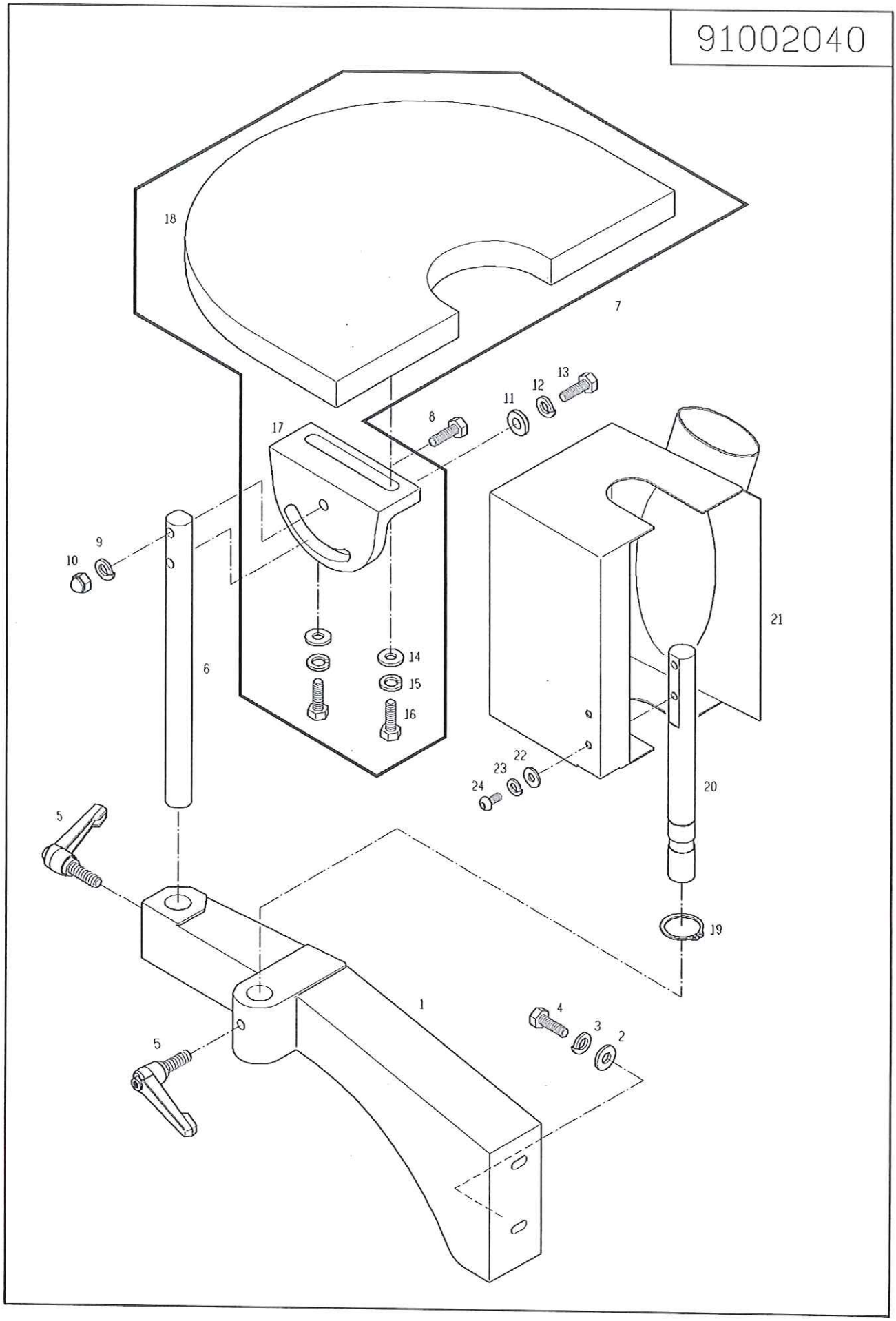

6.1. SAFETY RULES FOR ELECTRICAL CONTROL SYSTEM

1. All electrical/electronic trouble shooting and repair should be undertaken only by personnel who are properly trained and have adequate knowledge and skill.
2. Do not alter or bypass protective interlocks.
3. Before starting, read and observe all warning labels.
4. When troubleshooting makes sure the power source has been disconnected.
5. Take extra precautions in damp areas to protect you from accidental grounding.
6. Before applying power to any equipment it must be established, without a doubt, that all persons are clear.
7. Do not open the electrical control panel unless it is necessary to check the electrical equipment.
8. Do not alter the electrical circuits unless authorized to do so by the manufacturer.
9. When replacing electrical components, make sure they conform to the manufacturer's specifications, including proper colour coding.
10. Do not wear metal frame glasses, metallic necklaces or chains while working on any electrical equipment. Also do not wear any ring, watch or bracelet while operating electrical equipment.

6.2. INSTALLATION DIAGRAM

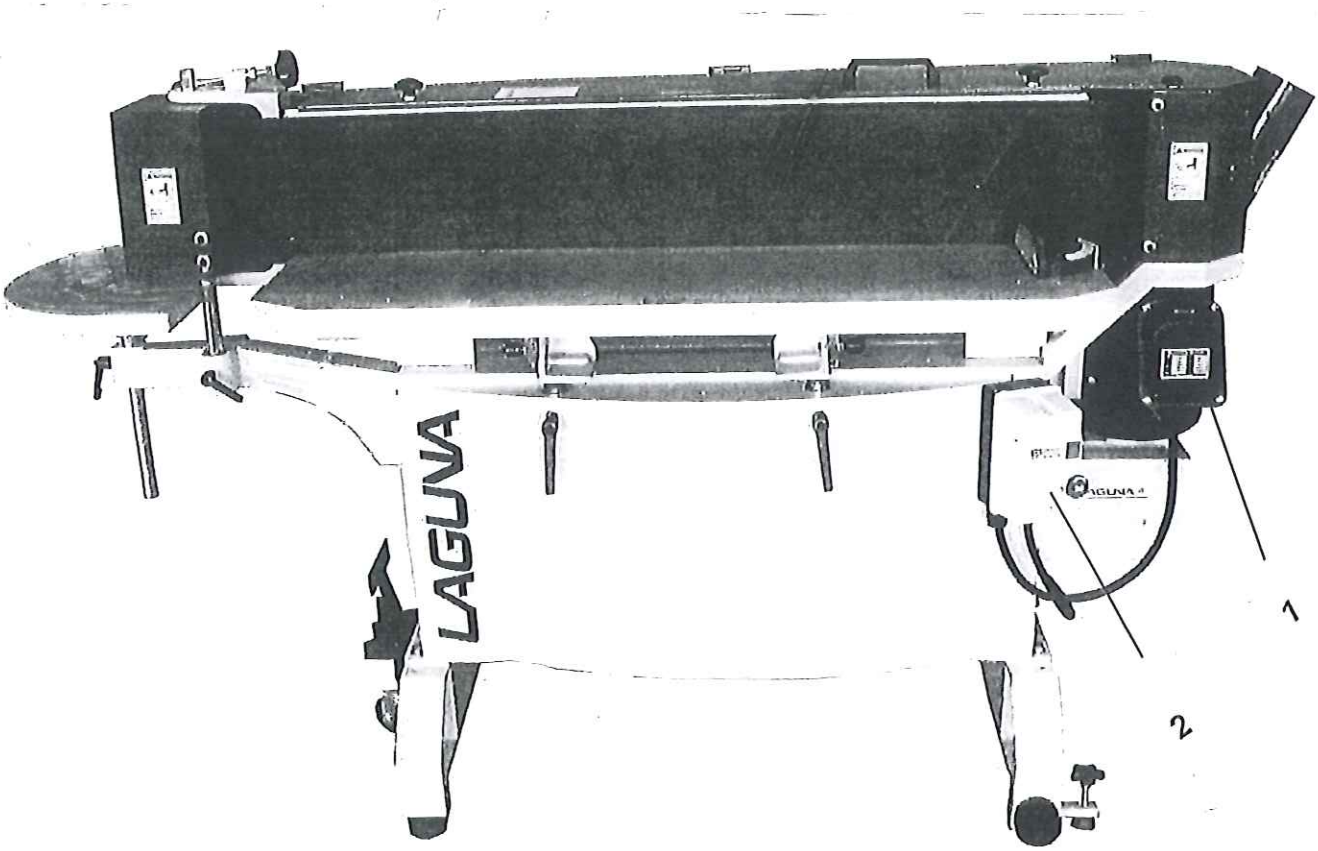

1. M1 Sanding drive motor
2. Electrical control box

6.3. ELECTRICAL COMPONENTS

Item designation	Designation	Technical data	Quantity	Supplier	Remarks
FR1	Over load	MS1-09DR 1~ 2.2Kw,220V	1	NHD	
KM1	Contactor				
SB1	Push button				
SB2	Push button				
M1	Sanding drive motor	2.2kw 1P 220V, 50/60HZ	1	SHUN CHENG	

6.4. ELECTRICAL WIRING DIAGRAM

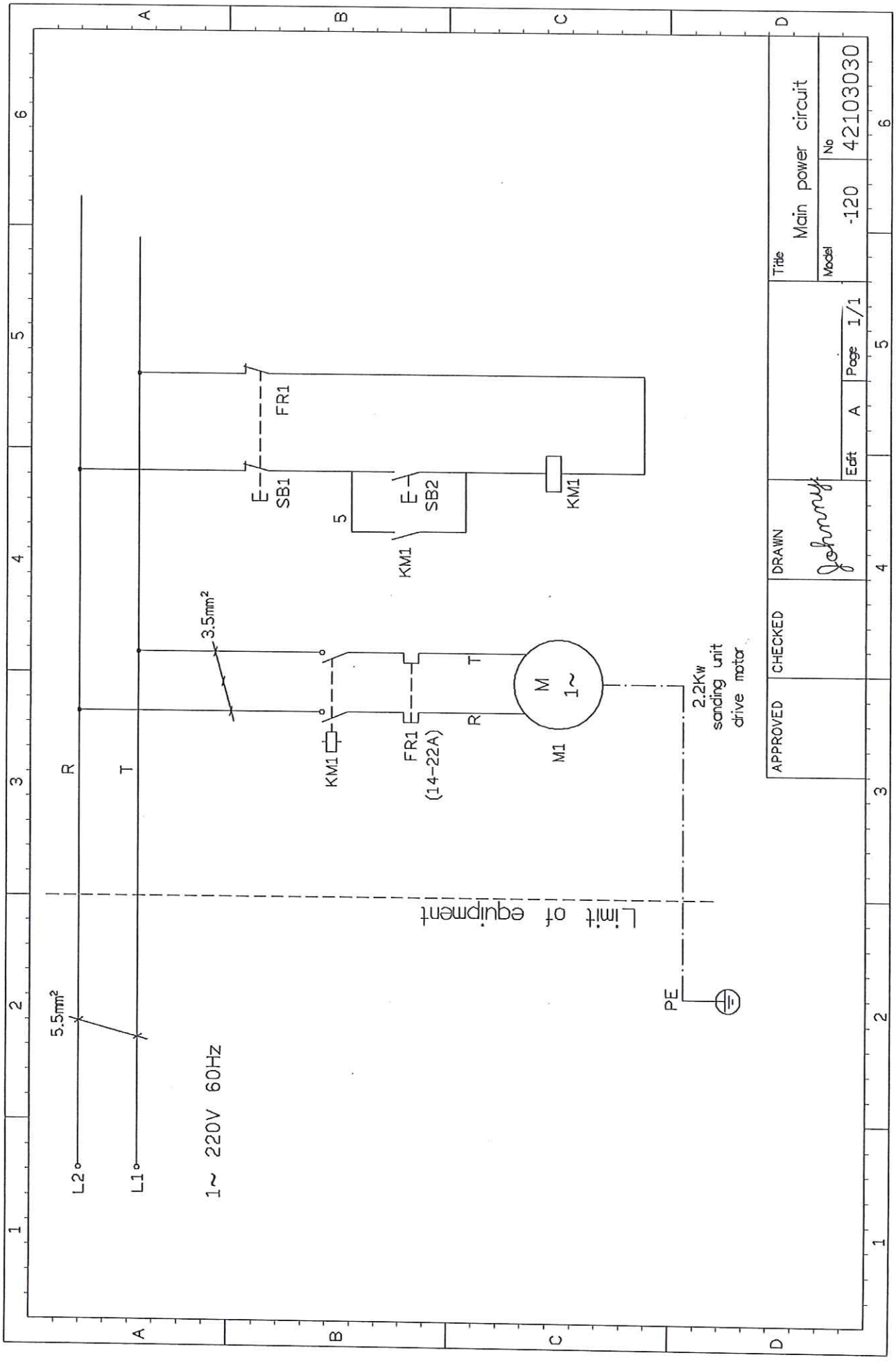

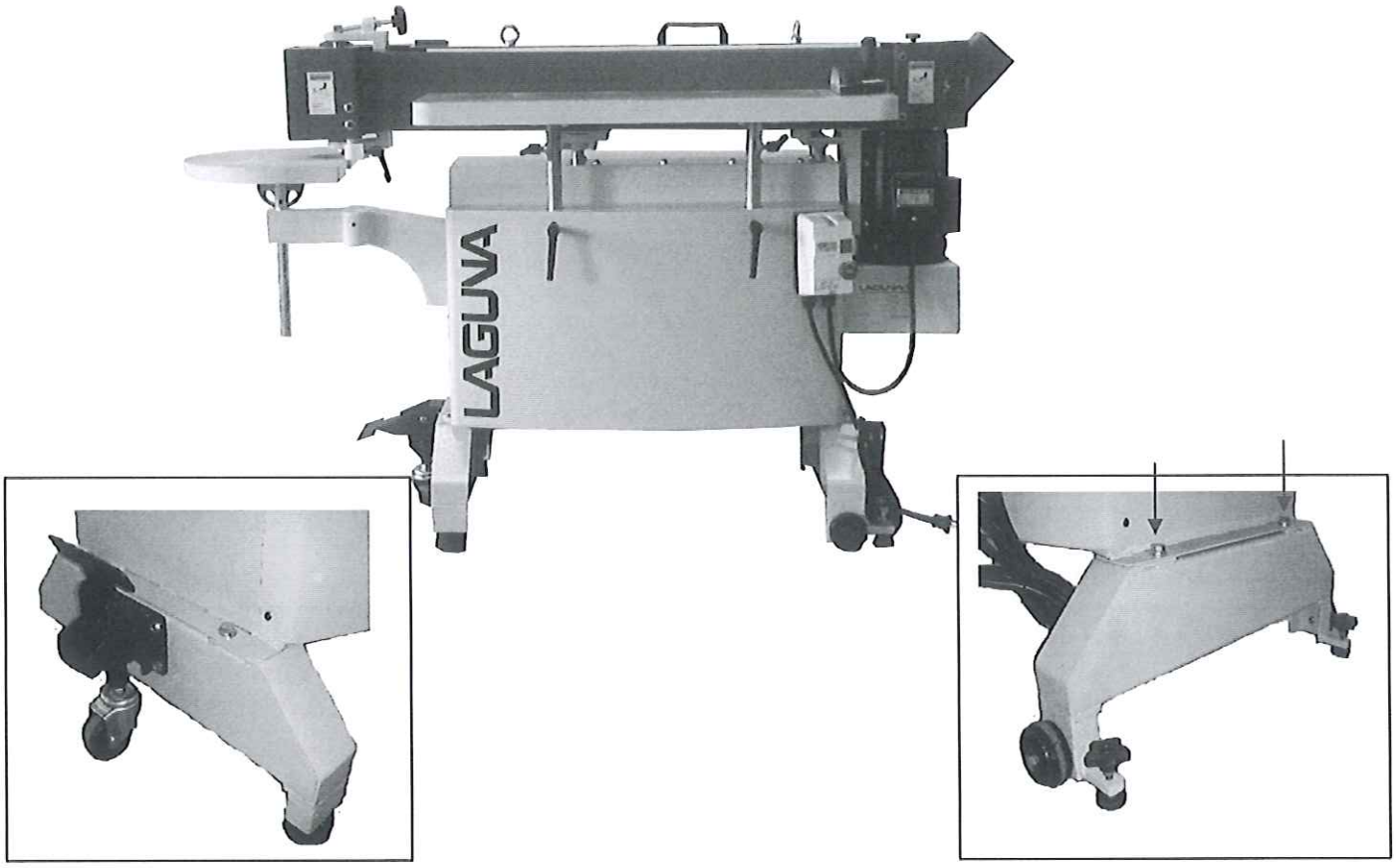

(FIG.1)

(FIG.2)

Step 1.

Take out the mobility wheel and tight on the left stand with Hex Head screws. Tight the left stand on the bottom of the machine with Hex Head bolts and washers. See (FIG.1)

Step 2.

Take out the right stand tight with Hex Head screws on the bottom of the machine. After move the sander to the new position, tight the 3 footpad screws till touch the ground and make sure the sander is no more moving before operation. See (FIG.2)

LAGUNA

2072 Alton Parkway. Irvine, CA 92606
Ph: 800.234.1976 | www.lagunatools.com

Laguna Tools is not responsible for errors or omissions.
Specifications subject to change. Machines may be shown with optional accessories.

© 2018, Laguna Tools, Inc. LAGUNA® and the LAGUNA Logo® are the registered trademarks of Laguna Tools, Inc. All rights reserved.