Make this Kwik & Easy no-sew blanket

in your favorite team colors, as a lovely personal gift, or just for fun!

Materials needed for one blanket:
Two coordinating pieces of fleece 1 3/4 yd - 2 yd (1.60 m - 2 m) each.

1. Trim selvages and square off ends, cutting both pieces of fleece the same size. Place fleece pieces, wrong sides together, with outside edges even. Mark and cut away a 4" (10 cm) square from each corner.

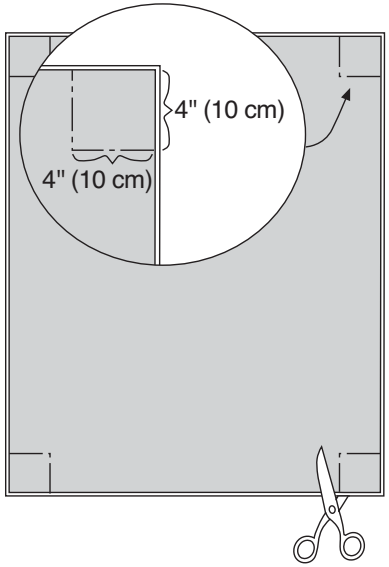

2. Mark a line for the fringe 4" (10 cm) from each edge, see illustration.

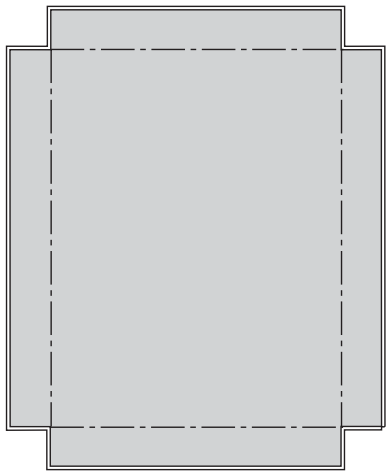

3. To make fringe, cut both layers from outer edge to marked line 3/4" (2 cm) apart.

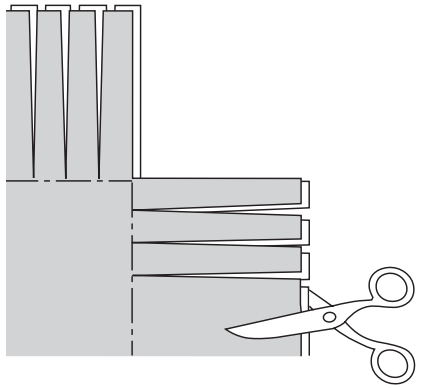

4. Starting in one corner, tie one piece of fringe from each piece together, using an overhand knot. Continue around entire blanket, taking care not to stretch fringe.

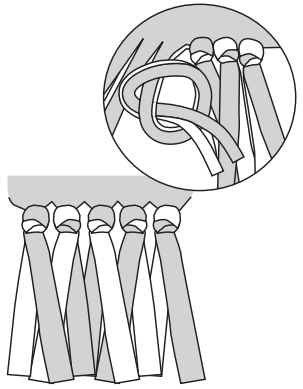

Note: Child's blanket can be made from printed panels or 1 1/2 yd (1.40 m) each of fleece.