MODULE LOCATION CODE (XY) X	Y	DESCRIPTION
E		EVAPORATOR MODULE
C		CONDENSER MODULE
	I	AIR INTAKE
	R	RIGHT AIR DISCHARGE (FACING MODULE AIR INTAKE)
	L	LEFT AIR DISCHARGE (FACING MODULE AIR INTAKE)
	B	BACK AIR DISCHARGE
	T	TOP AIR DISCHARGE

AIR PANEL OPTIONS BY MODULE LOCATION														
EVAPORATOR MODULE					CONDENSER MODULE INDOORS					CONDENSER MODULE OUTDOORS				
EI	ER	EL	EB	ET	CI	CR	CL	CB	CT	CI	CR	CL	CB	CT
G, I	G, D, P	G, D, P	G, D, P	G, D, P	G, I	G, D, P	G, D, P	G, D, P	G, D, P	L	L	L	L	P

AIR PANEL OPTION CODE	DESCRIPTION
G	GRILL
P	COVER PLATE
D	10" DIA DUCT ADAPTER DISCHARGE PLATE
I	10" DIA DUCT ADAPTER INTAKE HOOD
L	OUTDOOR LOUVER
H	HUMIDIFIER
X	POSITION NOT AVAILABLE
N/A	NOT AVAILABLE IN THIS CONFIGURATION

MODULE NOTES	DESCRIPTION
ER	MODULE LOCATION HAS SYSTEM TEMPERATURE CONTROLLER, MODULE CONTROLS, AND MODULE POWER CONNECTION
CL INDOOR	INDOOR APPLICATIONS - MODULE LOCATION HAS MODULE CONTROLS AND POWER CONNECTION
CL OUTDOOR	OUTDOOR APPLICATIONS - MODULE LOCATION HAS POWER CONNECTION
CB OUTDOOR	OUTDOOR APPLICATIONS - MODULE LOCATION HAS INTERNAL MODULE CONTROLS

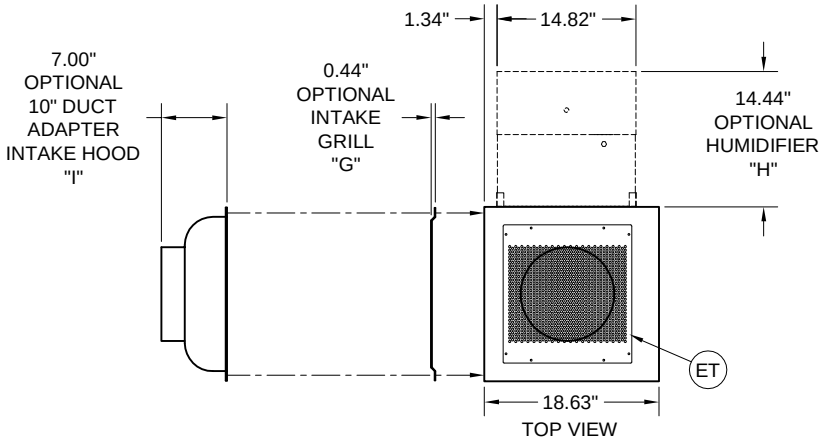

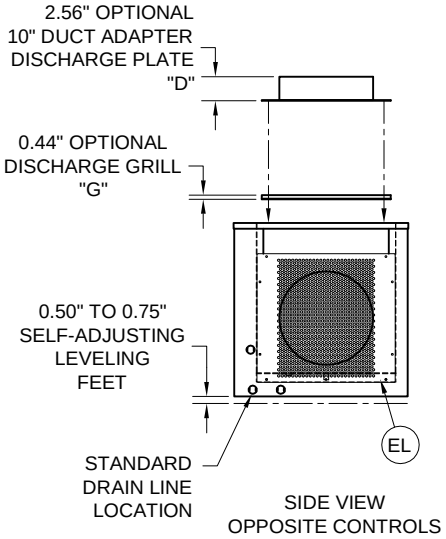

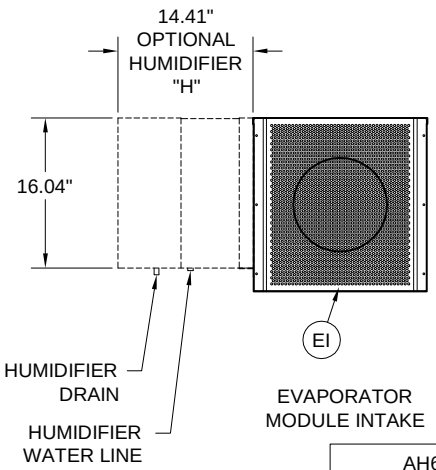

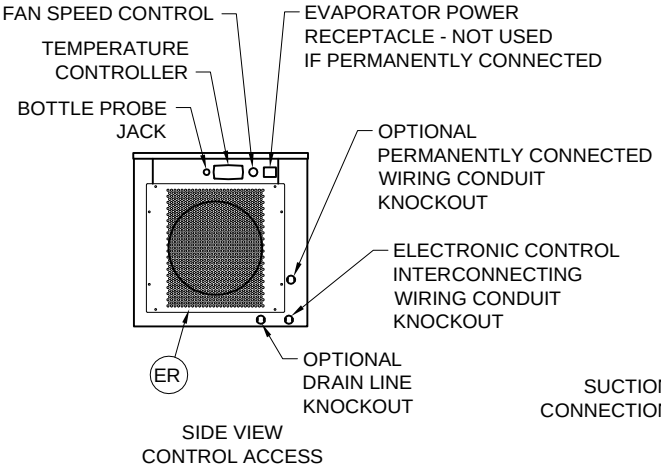

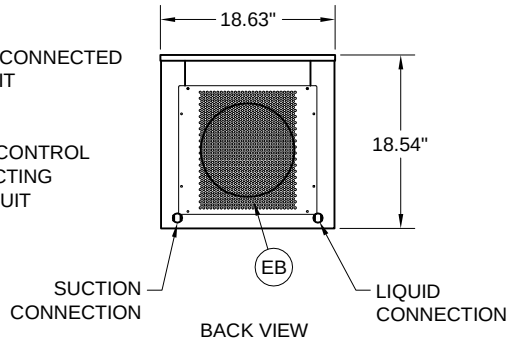

AH6500S / AH8500S
SPLIT SYSTEM
EVAPORATOR MODULE

1640C REV00