THIS DRAWING IS PROPRIETARY AND CONFIDENTIAL PROPERTY OF TROMBETTA AND IS LOANED IN CONFIDENCE WITH THE UNDERSTANDING THAT IT WILL BE KEPT CONFIDENTIAL AND USED ONLY FOR THE PURPOSE FOR WHICH IT IS LOANED.

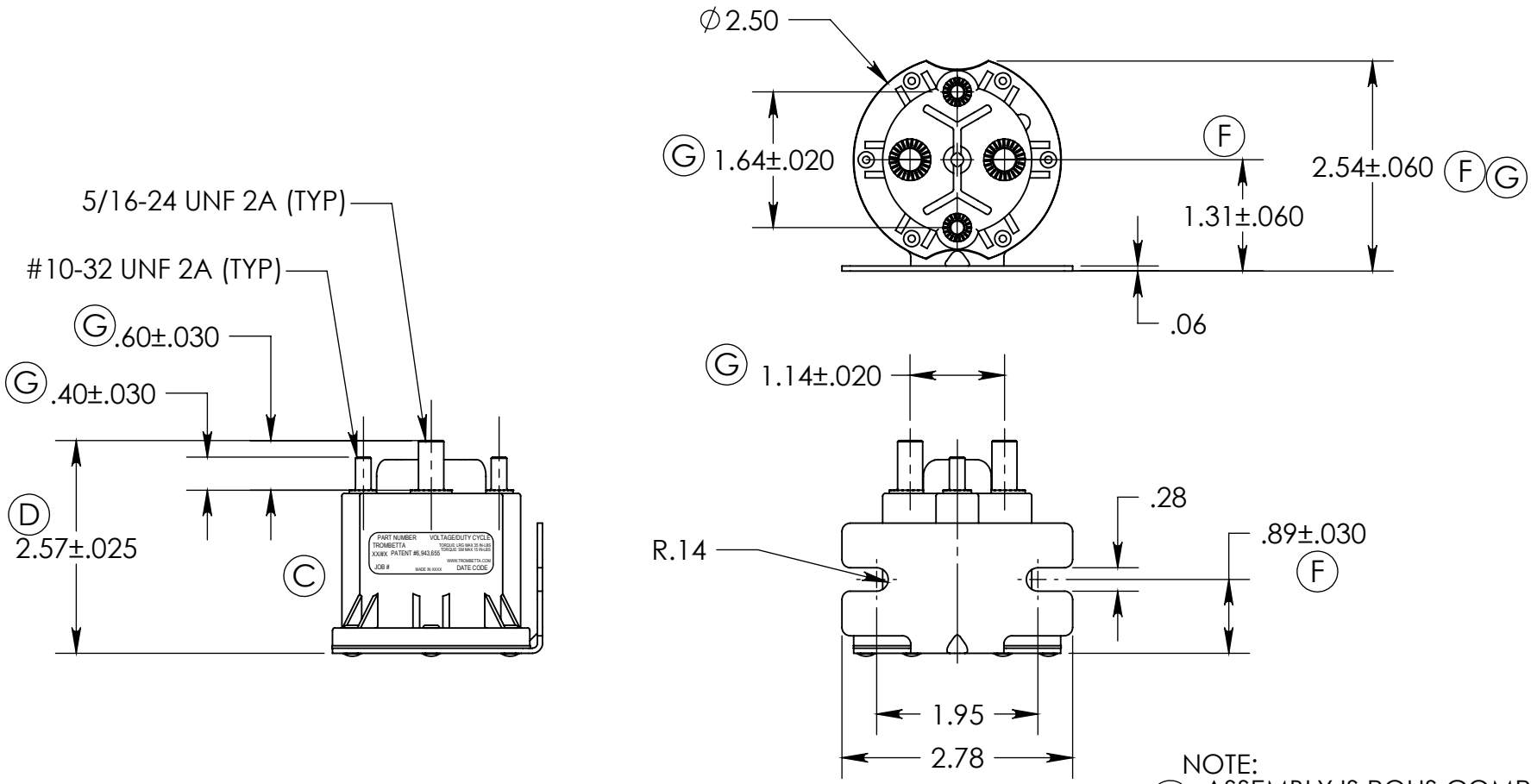

NOTE:
E ASSEMBLY IS ROHS COMPLIANT

REV.	DESCRIPTION	BY	ECN	DATE	APP.
G	ADDED TOLERANCES TO FIVE DIMENSIONS, CHANGED TOLERANCE ON LENGTH, WAS .030	CAW	6322	11/4/10	DAH
F	CHANGED 2 DIMENSIONS & ADDED TOLERANCES, WAS 1.35, 2.54 & .89	CAG	6140	10/29/09	DAH
E	ADDED ROHS NOTE	CAG	6078	8/3/09	DAH
D	ADDED TOLERANCE TO HEIGHT DIMENSION	CAG	4771	10/25/06	DAH
C	ADDED PATENT # TO LABEL	CAG	4642	10/18/05	DAH

MATERIAL

FINISH

UNLESS OTHERWISE SPECIFIED
.XXX +/-.005 .XX +/- .01 ANG. +/- 1°
BREAK ALL EDGES .005-.015 125 FINISH
FILLETS .010-.020 RAD.

Trombetta®
MOTION TECHNOLOGIES

684-XX51 SERIES DIMENSIONAL ASSEMBLY

DRAWN TM	SCALE:1:2	DWG. NO.
APPR. TM	DATE 6/23/03	E08432