Danze®

SPECIFICATIONS

SINGLE HANDLE PRESSURE BALANCE TUB & SHOWER FAUCET

Description

- Single handle with self-cleaning two-function showerhead
- 1/2" slip spout fits 1/2" copper or 1/2" IPS stub-out
- Diverter on spout
- Back to back installation capabilities

Flow & Valving

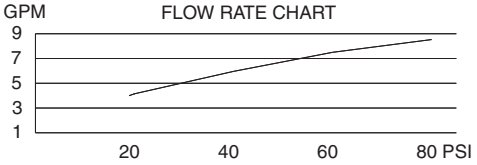

Standards

- ASME A112.18.1
- CSA B125
- ASSE 1016
- Listed IAPMO/UPC
- Energy policy act of 1992
- ADA Accessibility Guidelines for Buildings and Facilities - 4.27.4 Controls and Mechanisms

Warranty

Danze products are covered by a manufacturer's limited "lifetime" warranty for manufacturing defects.

D510011 (shown)
MELROSE™

With Stops:
D510011 (Tub/Shower)
D500511 (Shower only)

Less Stops:
D520011 (Tub/Shower)
D520511 (Shower only)

Available Colors & Finish
- Chrome
- Brushed Nickel (BN)
- Chrome with Polished Brass Accents (CPBV)

Trim Kits: (for use w/pressure balance valves)
D510011T (Tub/Shower trim)
D500511T (Shower only trim)
D500611T (Tub trim w/valve escutcheon)

Special Packaging
- This product also available with valve packaged separate from trim.
- Use with single handle pressure balance valves:
  D112000BT (w/stops)
  D115000BT (w/o stops)
- Valves are combination 1/2" copper sweat, 1/2" NPT threaded connectors for all ports.

W/DIVERTER & STOPS

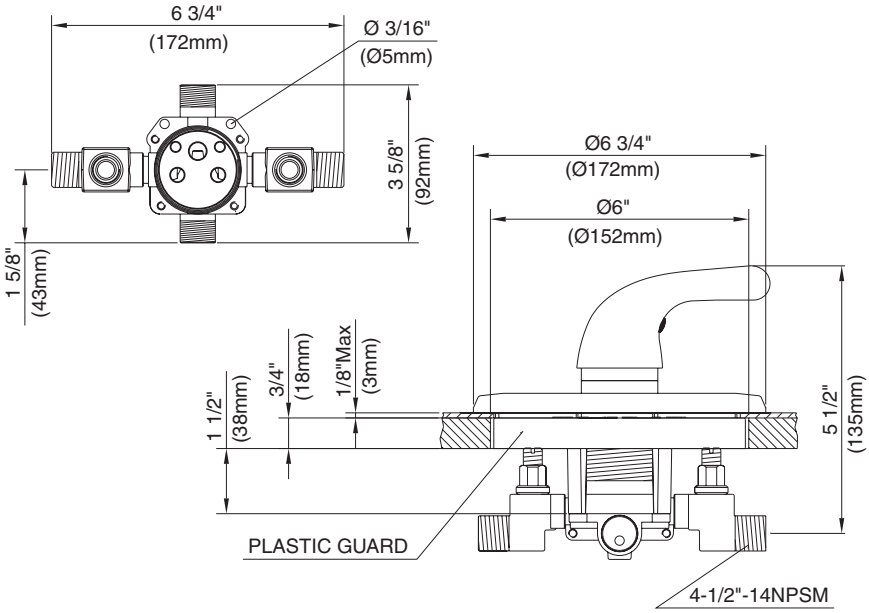

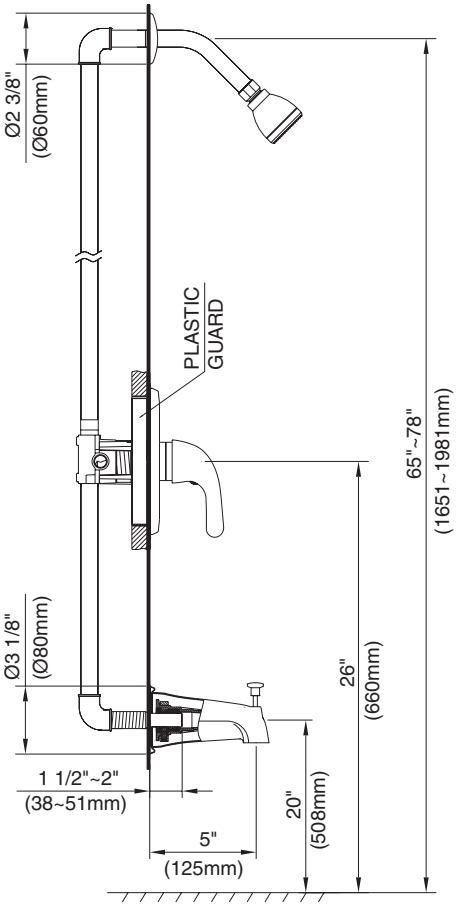

Specific Features: _____ *Submitted Model No.:* _____

Danze, Inc., 2 Territorial Court, Suite A, Bolingbrook, IL. 60440, USA

Danze®

SPECIFICATIONS

SINGLE HANDLE PRESSURE BALANCE TUB & SHOWER VALVES

Critical Dimensions : Rough-in valve D112000BT (w/stops) & D115000BT (w/o stops)

W/SCREWDRIVER STOPS

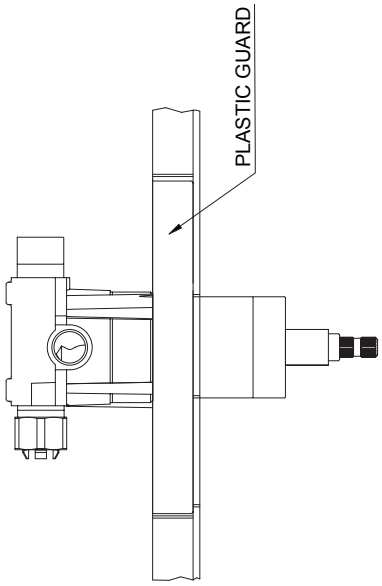

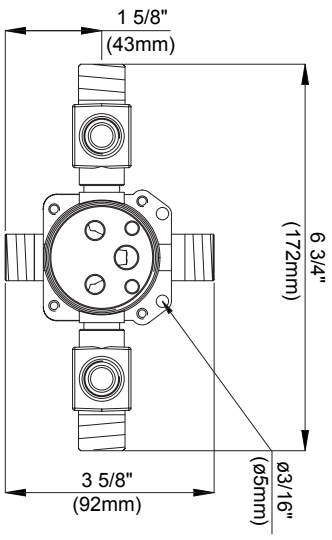

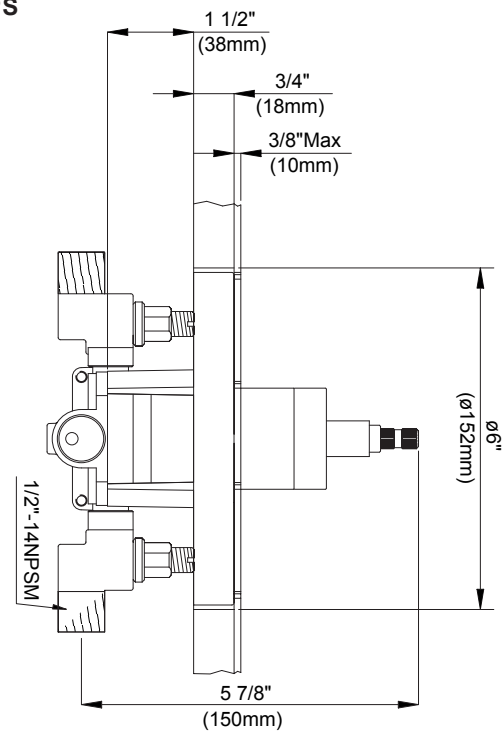

LESS/SCREWDRIVER STOPS

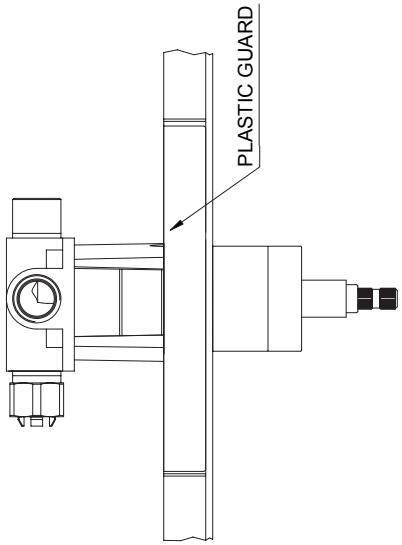

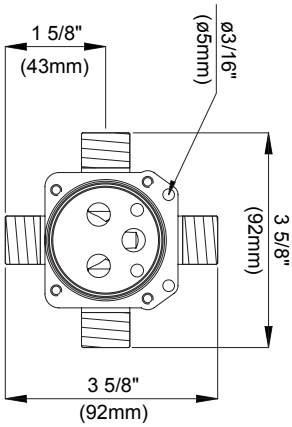

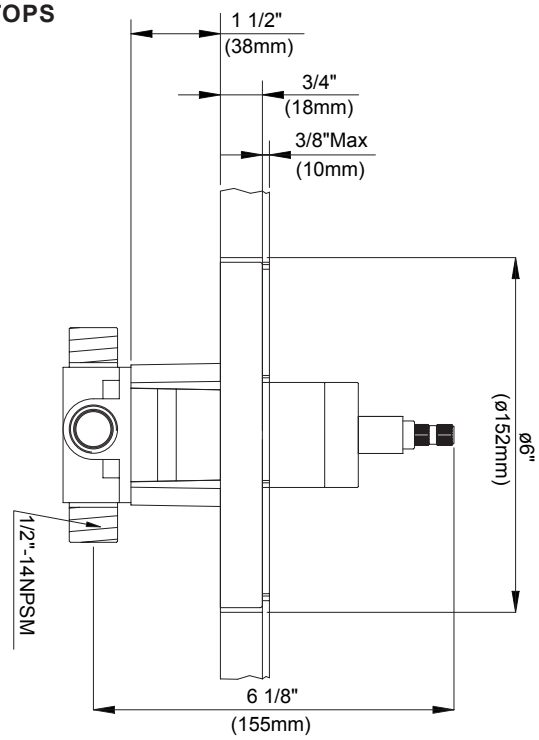

Specific Features: _____ *Submitted Model No.:* _____

Danze, Inc., 2 Territorial Court, Suite A, Bolingbrook, IL. 60440, USA