Italian LT32 Bandsaw

Model Number: MBAND325200
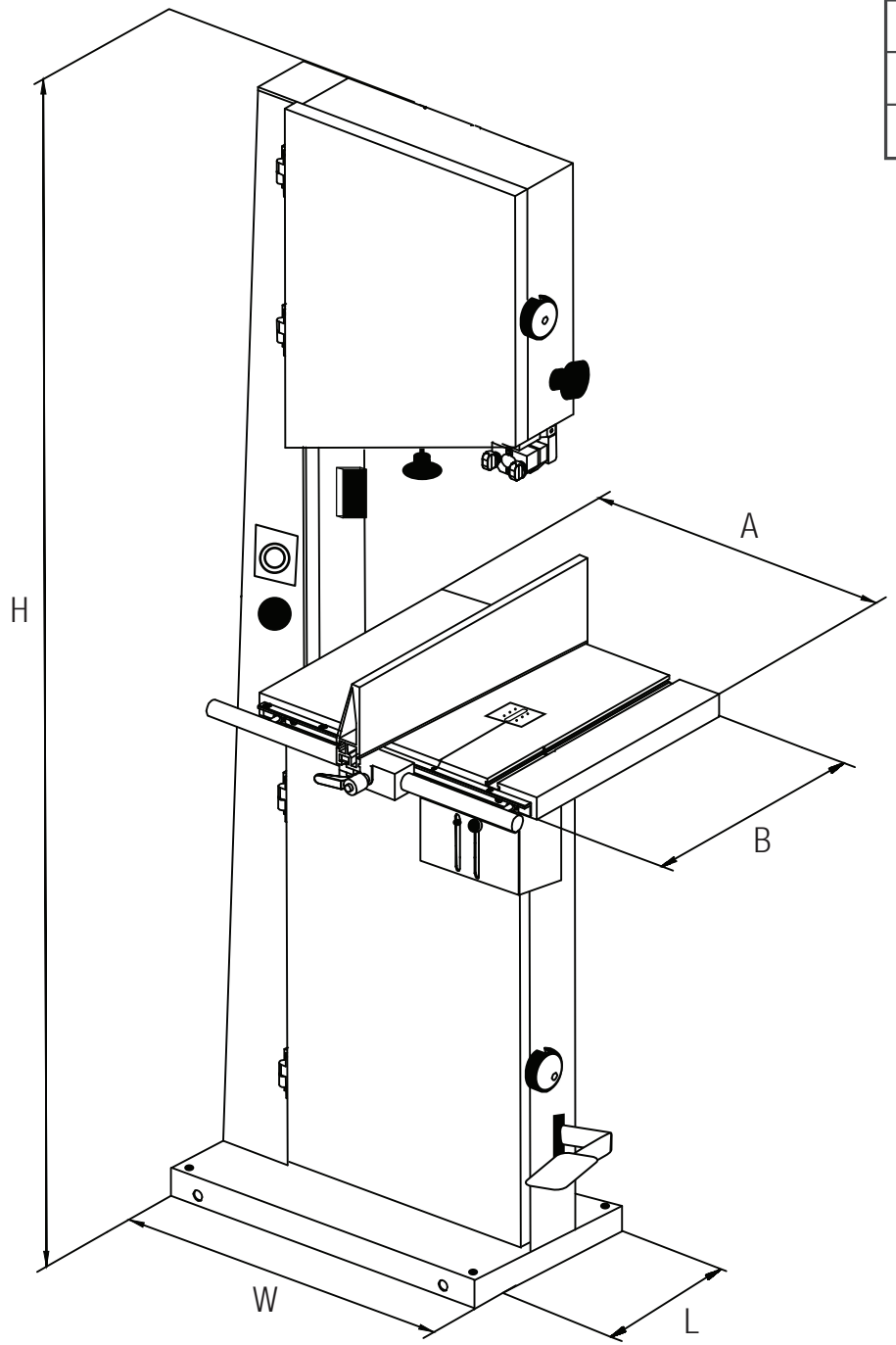
Specifications	
H	99 inches
A	42 inches
B	28 inches
W	47 inches
L	21 inches