THRIVING ON INNOVATION

LAGUNA TOOLS

LT14/16/18 3000 Series Bandsaw Manual

17101 Murphy Avenue, Irvine, CA 92614 www.lagunatools.com 800.234.1976

Dear Woodworker:

Thank you for your purchase and welcome to the Laguna Tools group of discriminating woodworkers. I understand that you have a choice of where to purchase your machines and appreciate the confidence you have in our products.

Every machine sold by Laguna Tools has been carefully designed and well thought-through from a woodworker's perspective. I cut on our bandsaws, lathes, table saws and combination machines. Through my hands-on experience, I work hard to make our machines better. I strive to give you machines that inspire you to create works of art. Machines that are a joy to run and work on. Machines that encourage your performance.

Today, we offer high-performance machines with innovative solutions that meet the needs of woodworkers and their ever-evolving craft.

I started Laguna Tools as a woodworker; I still am.

Thank you again for becoming a Laguna Tools customer.

Torben Helshoj

President and Founder - Laguna Tools

Thriving on Innovation

Table of contents

	Page number
Safety Rules	**4**
Warranty	**5**
Noise emission	**6**
Specification sheet	**6**
Receiveing your machine	**7**
Introduction to your machine	**7**
Parts of the bandsaw	**10**
Where to locate your machine	**14**
Unpacking your machine	**14**
Assembly and setup	**17**
Adjusting the bandsaw	**29**
Using the bandsaw	**37**
Maintenance and troubleshooting	**47**
Electrical drawing	**56**
Exploded view drawings	**57**
Exploded view drawings and parts lists	**58**

Safety Rules

As with all machinery there are certain hazards involved with the operation and use of your new machine. Using it with caution will considerably lessen the possibility of personal injury. However, if normal safety precautions are overlooked or ignored, personal injury to the operator may result. If you have any questions relative to the installation and operation, do not use the equipment until you have contacted your supplying distributor.

Read carefully before operating the machine:

1. **Keep the working area clean and be sure adequate lighting is available.**
2. **Do not wear loose clothing, gloves, bracelets, necklaces or ornaments. Wear face, eye, respiratory and body protection devices as indicated for the operation or environment.**
3. **Be sure that the power is disconnected from the machine before tools are serviced or an attachment is to be fitted or removed.**
4. **Never leave the machine with the power on.**
5. **Do not use dull, gummy or cracked cutting tools.**
6. **Be sure that the keys and adjusting wrenches have been removed and all the nuts and bolts are secured.**

Limited Warranty

New woodworking machines sold by Laguna Tools carry a one-year warranty from the date of shipping. Laguna Tools guarantees all new machines sold to be free of manufacturers' defective workmanship, parts, and materials.

We will repair or replace, without charge, any parts determined by Laguna Tools, Inc. to be a manufacturer's defect. We require the defective item/part to be returned to Laguna Tools. In the event the item/part is determined to be damaged due to lack of maintenance, cleaning or misuse/abuse, the customer will be responsible for the cost to replace the item/part, plus all related shipping charges.

This limited warranty does not apply to natural disasters, acts of terrorism, normal wear and tear, product failure due to lack of maintenance or cleaning, damage caused by accident, neglect, lack of or inadequate dust collection, misuse/abuse or damage caused when repair or alterations have been made or attempted by others.

Laguna Tools, Inc. is not responsible for additional tools or modifications sold or performed (other than from/by Laguna Tools, Inc.) on any Laguna Tools, Inc. woodworking machine. Warranty may be voided upon the addition of such noted tools and/or modifications, determined on a case-by-case basis.

Normal user alignment, adjustment, tuning and machine settings are not covered by this warranty. It is the responsibility of the user to understand basic woodworking machinery settings and procedures and to properly maintain the equipment in accordance with the standards provided by the manufacturer.

Parts, under warranty, are shipped at Laguna Tools, Inc's cost either by common carrier, FedEx Ground service or similar method.

Technical support to install replacement parts is primarily provided by phone, fax, or e-mail. The labor required to install replacement parts is the responsibility of the user.

Laguna Tools is not responsible for damage or loss caused by a freight company or other circumstances not in our control.

Only new machines sold to the original owner are covered by this warranty.

For warranty repair information, call 1-800-332-4094.

Noise Emission

Notes concerning noise emission

Given that there exists a relationship between noise level and exposure times, it is not precise enough to determine the need for supplementary precautions. The factors affecting the true level of exposure to operators are clearly the amount of time exposed, the characteristics of the working environment other sources of dust and noise, etc. For example, adjacent machines impact the level of ambient noise. It is possible that exposure level limits will vary from country to country.

Specification sheet

	LT14 3000	LT16 3000	LT18 3000
Motor	2 HP Leeson 220 V/1ph - STD 3 HP Leeson 220 V/1ph - SUV	3 HP Leeson 220 V Single phase	4 HP Leeson 220 V Single phase
Throat	13.5"	15"	17.5"
Table	Cast iron 15" X 15"	Cast iron 19" X 16"	Cast iron 20" X 20"
Miter slot	2 X "T" slots	2 X "T" slots	2 X "T" slots
Table height	35.5"	36"	36"
Foot brake	STD=No, SUV=Yes	Yes w/ micro switch	Yes w/ micro switch
Fly wheel	Cast iron Dia 14"	Cast iron Dia 18"	Cast iron Dia 18"
Resaw Capacity	14"	12"	15-1/2"
Minimum Blade	1/16"	1/16"	1/16"
Maximum blade	1"	1"	1-1/4"
Mobility kit	Optional	Optional	Optional
Guides	Laguna guides	Laguna guides	Laguna guides
Blade length	125"	132"	145"
Height	70"	70.5"	75"
Upper guide post	Rack and pinion	Rack and pinion	Rack and pinion
Weight	420LB	450LB	525LB

Serial and data plate

Receiving your machine (Some options may not apply to all 3 saws.)

Note: It is probable that your machine will be delivered by a third party. Before you unpack your new machine, you will need to first inspect the packing, invoice and shipping documents supplied by the driver.
Insure that there is no visible damage to the packing or the machine. You need to do this prior to the driver leaving. All damage must be noted on the delivery documents and signed by you and the delivery driver. You must then contact the seller [Laguna Tools] within 24 hours.

Introduction to Bandsaws

This bandsaw is designed to give you years of safe service. Read this owner's manual in its entirety before assembly or use.
The bandsaw is generally defined as a saw blade in the form of an endless steel band that rotates around two or more wheels. This blade is a continuous metal band with teeth on one side. As the wheels rotate, so does the band, which creates the continuous sawing action. Because the direction of the blade is always downward toward the table, there is little danger [except for special cuts] that the wood will be thrown back at the operator, which is called a kickback. There is always danger of kickback when a circular saw is being used.

For safety reasons many woodworkers prefer the bandsaw especially when cutting small pieces. The unique feature of the bandsaw is that the work piece can be rotated around the blade creating a curve. It is the tool most often used when curves have to be cut in wood. Because the bandsaw blade is fairly thin, it can cut thick stock with a minimum of horsepower. For this reason the bandsaw is often used when valuable pieces of wood are made into a thin piece of veneer.

What you will Receive with the Bandsaw.

Main Table

Mobility kit handle

Rip fence

Mobility axel and wheels

Table gas assistor

Levelling blots

Allen keys

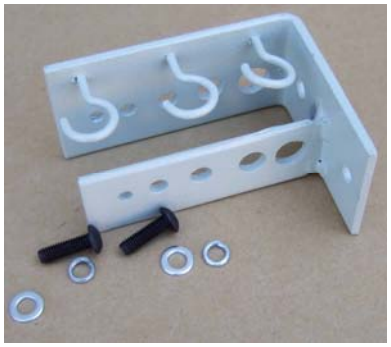

Tool holder

Mobility kit bracket

Note: The mobility kit is optional

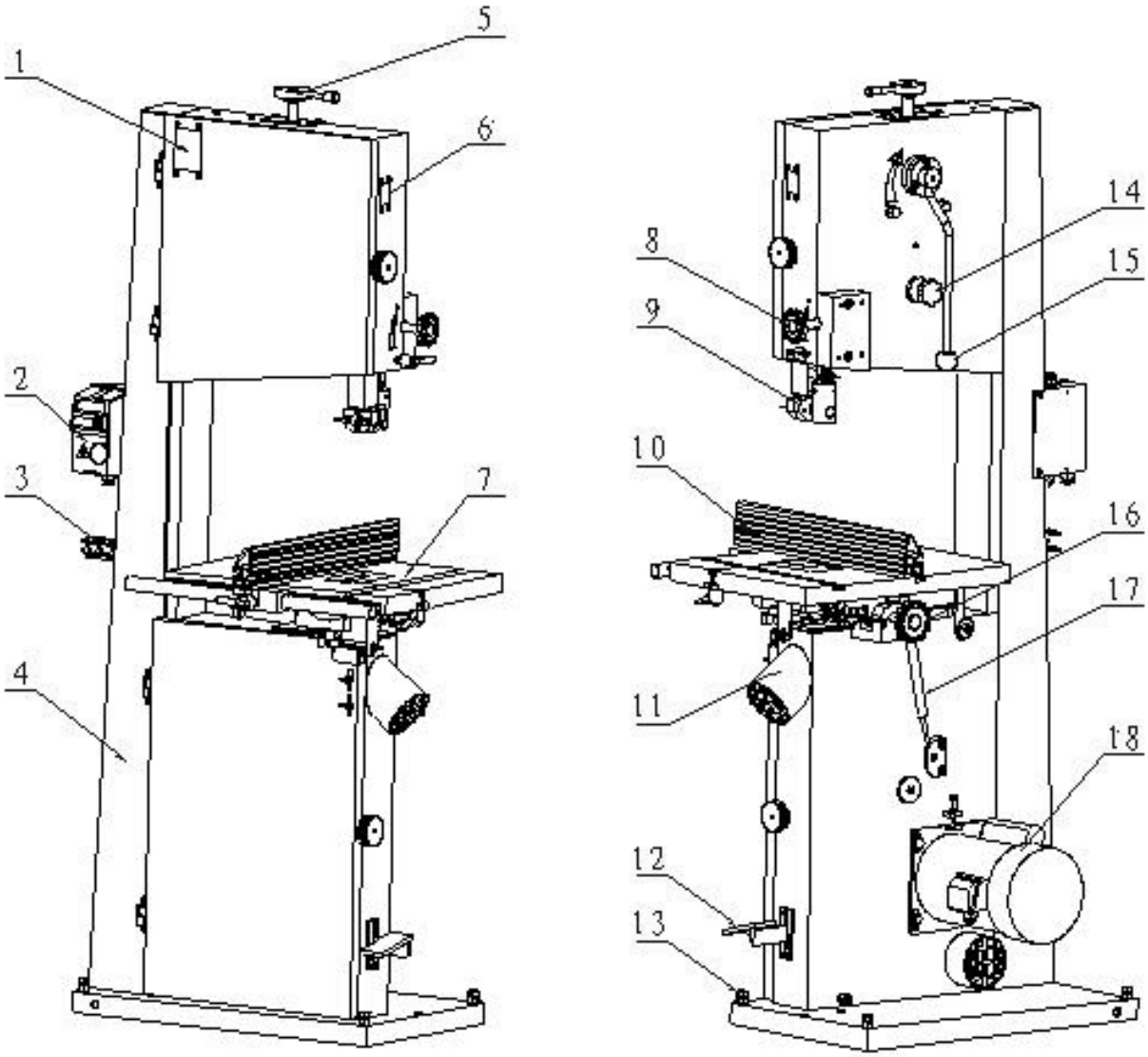

1. Tension Indicator Window	10. Rip Fence Assembly
2. Magnetic Switch	11. Upper Dust Port 4”
3. Tool Storage Hooks	12. Foot Brake
4. Frame	13. Mounting Bolt
5. Blade Tension Lever	14. Blade Tracking Knob
6. Blade Tracking Window	15. Quick Release Blade Tension Lever
7. Iron Table	16. Table Tilt Knob
8. Blade Guide Adjustment Hand Wheel	17. Supporting Spring Assembly
9. Blade Guide	18. Motor

Parts of the Bandsaw

The bandsaw does not have many parts. The major parts are discussed in this manual. If you are not familiar with the bandsaw, take the time to read this section and become familiar with the machine.

Flywheel

The blade is suspended over two wheels that are covered with rubber called a tire. The tire cushions the blade and protects the teeth from coming in contact with the metal of the flywheel. The lower wheel is the drive wheel and is attached to the motor with a rubber drive belt. The lower flywheel powers the blade and pulls the blade down through the work piece. The top wheel has two functions. One function is to balance or track the blade on the wheels, and the second one is to tension the blade. Both functions are adjustable.

Body

The body of the bandsaw is a "U"-shaped frame, which houses all the parts of the machine. This is the heart of the bandsaw and has to be very rigid as it takes the strain of the blade being tensioned.

Table

The table supports the work piece and can tilt to produce cuts at various angles. It has a groove to the right-hand side of the blade which is used to guide the miter gauge. In the center there is a table insert which the blade passes through. Should the blade wander off center, this table insert will protect the blade from damage as it is soft and will not damage the blade. The table also supports the adjustable fence, which is used for parallel cuts. There is an aligning pin or nut and screw, which joins both sides of the table and stops the table from warping. The pin or nut and bolt must always be fitted in the table and only removed when removing or fitting a blade.

Blade guides

There are two sets of blade guides, one above and one below the table. The function of the guides is to give the blade stability and ensure that the blade movement left/right, forward/back is kept to a minimum. The guides above the table are fitted to a shaft that has vertical adjustment. The upper guides

are adjustable so that the guides are held just above the job being cut. This gives the blade the maximum amount of stability and also keeps the amount of blade that is exposed to a minimum. If you are using blades narrower than ¼", there is available an optional cool block guide system.

Guards

When running, the blade can be very dangerous and the amount of blade that is exposed must be kept to a minimum. The machine is supplied with a number of guards all of which **MUST** be installed and used while the machine is running.

There is a guard that is attached to the lower door and is adjustable vertically once the door is closed. There is a guard on the guide vertical adjustment shaft. The guard is only removed to install or remove the blade.

Drive

The drive [power] is supplied to the machine by an electric motor located at the back of the machine. It powers the lower flywheel through a rubber drive belt and is controlled by switches that are mounted on the frame vertical post at the front of the machine. It is also controlled by switch on the foot brake.

Electrical connection

This is achieved by connecting the electrical supply to a switch/terminal box located on the side of the machine. A cable is provided, but you will need to have a suitable plug fitted to suit your electrical system. Never connect directly to the electrical motor, and all electrical connections must be conducted by a qualified electrician. For detailed instructions see the assembly section of the manual.

Brake

The machine is supplied with a foot brake. It is located close to the ground on the right-hand side of the machine. It has two functions. First, to remove the power to the motor, which is achieved with a switch that is mounted on the body of the machine. The second function is to slow the lower flywheel, this is achieved by applying a brake pad to the flywheel. The more pressure that is applied, the faster the flywheel slows.

Dust Collection

The bandsaw produces a lot of sawdust, so extraction is very important. This is achieved by connecting dust extraction hoses to the dust ports located at the back of the machine and the righthand side of the machine below the table with a minimum capacity of 1,000 CFM. The stronger the suction from the dust collector the better for you and the machine.

Identification

There is a plate at the back of the machine listing all the manufacturing data including the serial number, model, blade length. etc.

Tension scale

Tension scales are designed to indicate the compression of a spring. As a rule, the greater the spring compression, the greater the tension on the blade. The tension scale does not register until the blade is relatively taut and is located on the inside of the body vertical post. The tension scale is a general reference and not a rule.

Tilt and Tension Mechanism

The upper wheel is attached to the tilt and tension mechanism. This mechanism adjusts the wheel so that the bandsaw blade can be adjusted for tracking. This is achieved by a screwed handle at the back of the machine that pushes on the mechanism and adjusts the axis of the wheel so that it runs true with the lower wheel. The second function is to tension the blade, which is achieved by adjusting the upper flywheel vertically. A handle is located at the top of the bandsaw and, when rotated, will move the wheel up or down. The machine has a quick acting blade release mechanism which is located at the back of the machine and will remove the tension from the blade to speed the removal and fitting of blades. The mechanism has a spring, which helps to keep the tension constant as the blade expands and contracts with the heat generated by the cutting action.

Fence

The fence is located to the left of the blade and is used to assist in parallel cuts. It is adjustable for the drift of the blade and also the thickness of the cut.

Where to locate your bandsaw

Before you remove your bandsaw from the pallet, select the area where you will use your machine. There are no hard and fast rules for its location but below are a few guidelines.
1. There should be an area at the front and back of the machine suitable for the length of wood that you will be cutting. If you intend to use your saw for scrollwork, this may not be important but should be considered at this stage.
2. Adequate lighting. The better the lighting, the more accurate and safely you will be able to work
3. Solid floor. You should select a solid flat floor, preferably concrete or something similar.
4. Close to power source and dust collection.

Unpacking your machine

To unpack your machine, you will need tin snips, knife and a wrench.
1. Using the tin snips, cut the banding that is securing the machine to the pallet.
WARNING: EXTREME CAUTION MUST BE USED BECAUSE THE BANDING WILL SPRING AND COULD CAUSE INJURY.
2. Lift the box off and discard.

3. Using the knife, cut the plastic wrap from the top. The table, motor, fence and accessories that were ordered could be attached to the side of the machine and extreme caution must be taken so that the parts do not fall and cause injury or damage. Remove them in order from the top and set aside.

4. Place the motor on the pallet behind the machine. Ensure that there is no tension on the motor wiring. It is recommended that the motor be assembled to the bandsaw prior to removing the bandsaw from the pallet [see mounting motor]. If you decide to remove the bandsaw prior to assembling the motor to the bandsaw, ensure that there is no tension on the motor wiring at any stage of the operation.

5. Remove the base mounting bolts that secure the machine to the pallet.

6. It is recommended that the machine be removed from the pallet by lifting it with a hoist or forklift. Place a sling through the bandsaw as shown below and lift vertically. Remove the pallet and lower to the floor. The machine can be lifted by using a forklift truck, by sliding it onto the forks or by using a forklift "SLING", as shown with a lifting capability of 2,000 Kg (440lb).

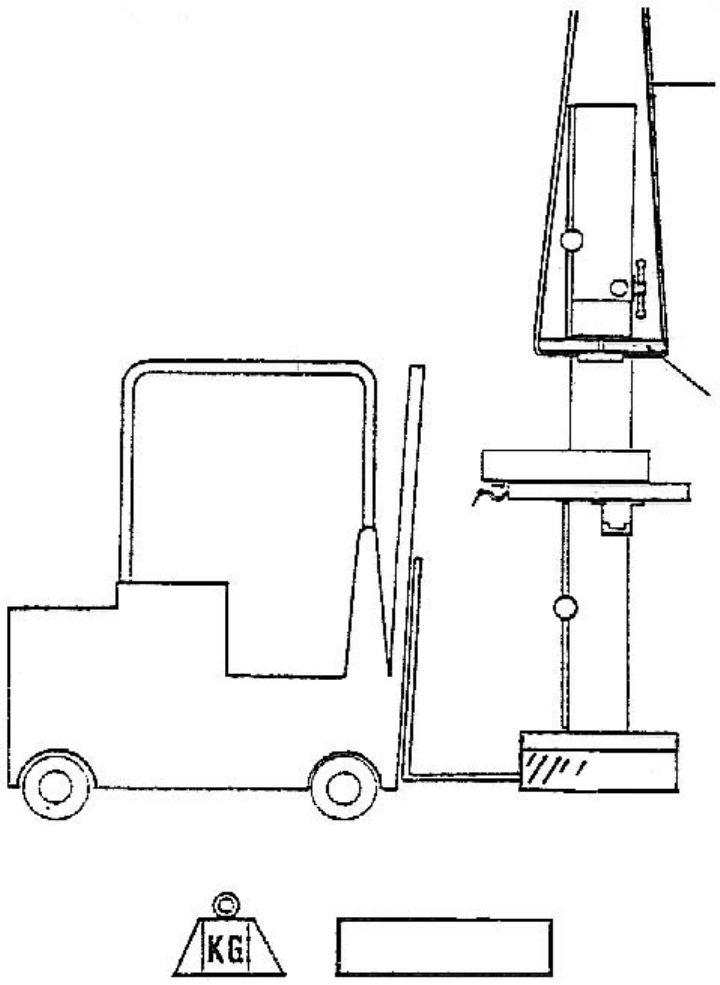

If no lifting device is available, the machine can be removed from the pallet as follows: Note: The machine is heavy, and if you have any doubt about the described procedure, seek professional assistance. Do not attempt any procedure that you feel is unsafe or that you do not have the physical capability of achieving. With two or more people, move the machine so that the base of the bandsaw is over the edge of the pallet. Tilt the bandsaw away from the pallet so that the base of the machine touches the floor, slide the pallet from under the machine and then move the bandsaw to the vertical position so that it is completely resting on the floor.

Assembly & Setup
Mounting the Motor

Two people are required to assemble the motor to the bandsaw; build up wooden blocks to the right height to rest the motor on. One person holds the motor in position, and the other will fit the drive belt and the bolts.

1. Attach the motor mounting plate to the motor with the 4 bolts provided.

2. Assemble the motor to the back of the bandsaw after the drive belt has been attached to the motor pulley and is located in the drive groove in the fly wheel.

.

Belt-tensioning bolt

3. Once the belt is mounted on both the pulley "V" grooves, and the mounting bolts are a snug fit but not fully tightened, apply tension by adjusting the tensioning bolt.
Tension is 3/16" deflection when using your thumb on one side of the belt. If the tension is too tight, you will experience motor strain: if it is too loose you will experience belt slippage and lack of power. Once the correct tension has been achieved, fully tighten the mounting bolts. After a few hours of operation it is necessary to check that the tension is correct, as the belts will bed into the "V" grooves. As a guide, the belt should have the same tension/deflection as the fan or alternator belt on your car.

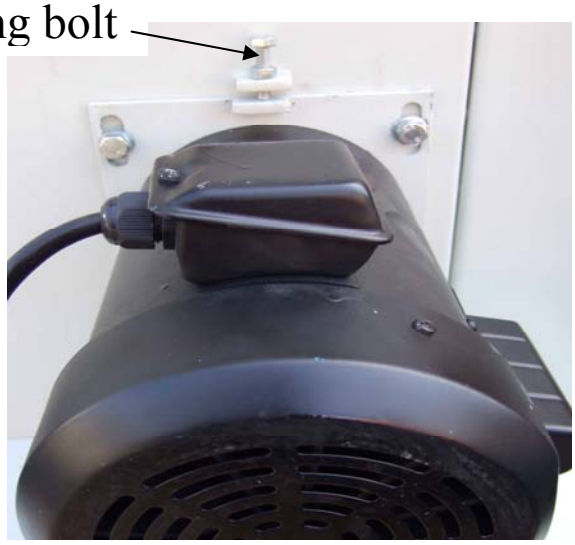

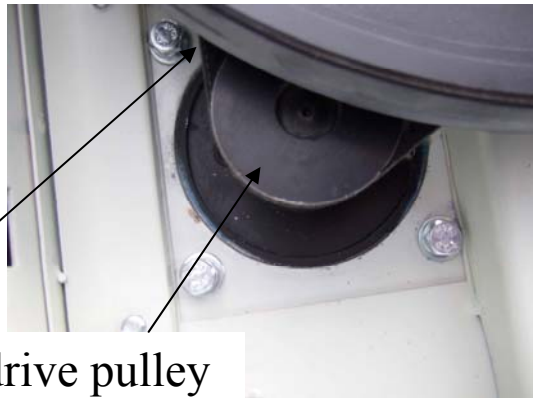

Motor drive belt

Motor drive pulley

Mobility Kit [Optional]

If you have purchased a mobility kit or it is supplied standard with your machine, now is the ideal time to fit it since the table has not been fitted to the machine and the bandsaw is lighter, however the mobility kit can be fitted later if you require it.

Mobility kit assembly procedure

1. Rest the bandsaw on a 2" X 4" wood block or something similar.

2. Fit the shaft through the base of the bandsaw.

3. Fit the wheels, washers and split pins as shown on both sides of the base.

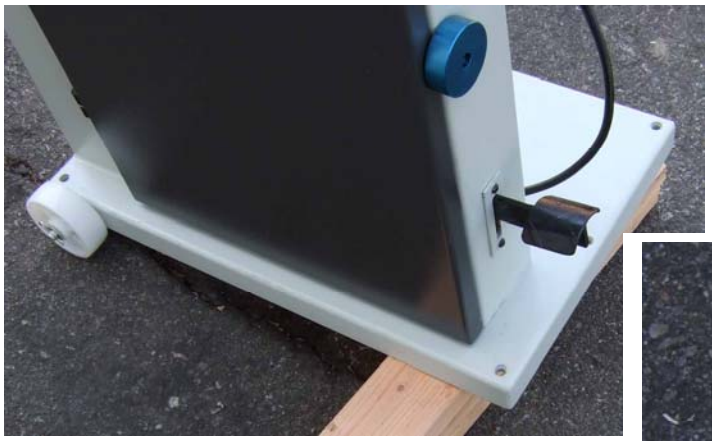

.

4. Place a wooden spacer under the machine and then fit the front bracket as shown.

Mobility kit handle

Levelling bolt

Leveling Bolts

If you are fitting a mobility kit, you will only need to fit 2 bolts at the front of the machine. If you decide not to fit the mobility kit or have not purchased one, then you will have to fit leveling bolts at all 4 corners of the machine.

1. Raise the machine off the ground onto wooden blocks.

2. Fit a bolt as shown to either 2 or 4 corners of the machine dependant on if you fit the mobility kit.

3. Lower the machine to the ground and place a spirit level on the column of the machine.

4. Adjust the bolts until the spirit level shows that the column is vertical in both planes and the machine will not rock.

5. Note that if you move the machine, you may find that the leveling bolts will need to be readjusted.

Installing the Table

Note :- It is recommended that 2 people be used to mount the table.

1. Remove the trunion clamp handle and trunion clamp nut from the relevant bolts.

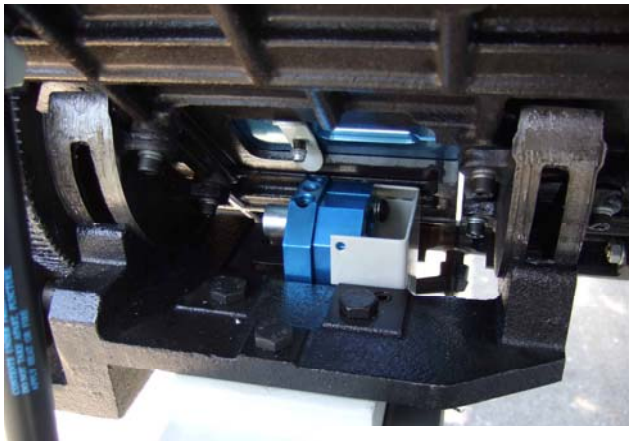

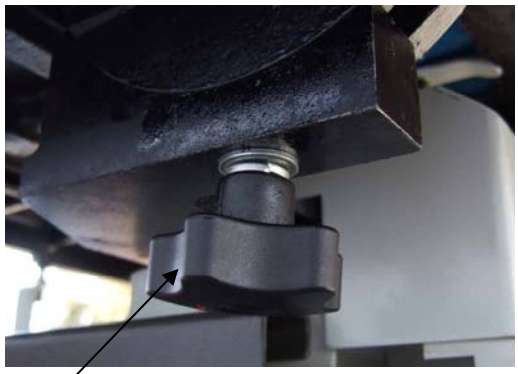

Trunion clamp handle

Trunion clamp nut

2. Position the table on the trunion, taking care not to damage any of the table or trunion surfaces.

3. While one person supports the table, the other person feeds the bolts through the trunion slots.

4. Fit the trunion handle and the trunion clamp nut. Tighten the trunion clamp nut and handle snugly. You will now fit the table gas assistor before you adjust the table clamp nut.

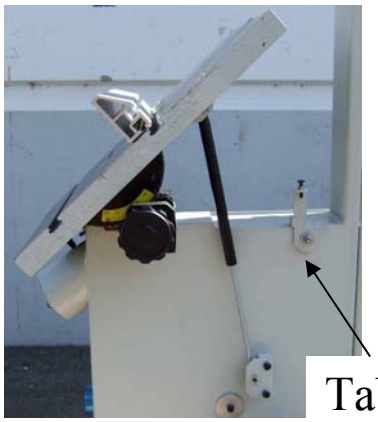

5. The table can be tilted to a maximum of 45 degrees away from the column and 15 degrees toward the column. To assist the movement, a gas assistor is provided. Fit the assistor to the bottom bracket with the spindle provided and fit the spring pin. Compress the assistor and fit the spindle and spring pin to the bracket in the table.

6. The trunion clamp nut can now be adjusted. Tighten the nut so that the table can be moved freely with the rack and pinion handle with the trunion clamp handle loose.

7. To angle the table, loosen the trunion clamp handle. Crank the rack and pinion handle so that the table moves to the required angle and lock in position. To return the table to the zero position, reverse the procedure.

8. A 90-degree stop is provided that can be adjusted by loosening the clamp nut and moving the bolt up or down. The stop comes factory set but should

movement have taken place during transport, adjust the stop so that the table is 90 degrees to the side of the blade.

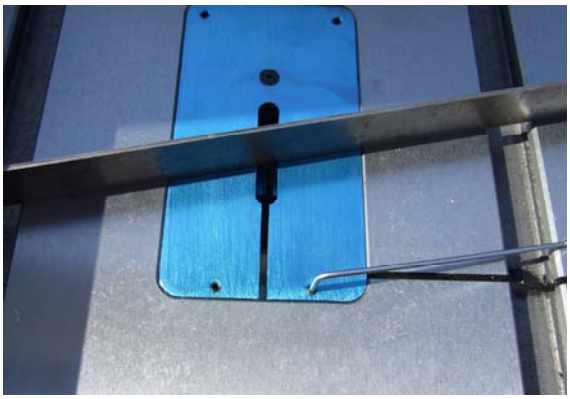

Table Insert

The machine is supplied with a removable table insert that is held in position with a wing nut. The table insert is removed when blades are removed or fitted to the machine. The insert is made of soft aluminium so that should the blade wander and contact the insert, there is less chance of damaging the blade.

Adjusting screws are provided to adjust the insert vertically level with the table. The insert comes factory set, but should adjustment become necessary, place the insert in the table with the wing nut in the clamped position.
Place a straight edge across the table and insert as shown and adjust the screws so that the table insert is level with the top of the table.

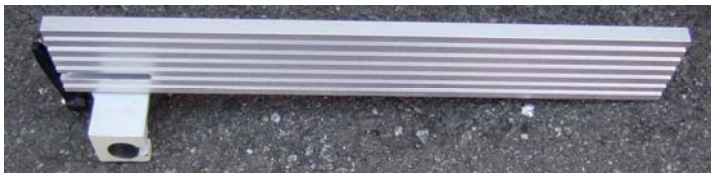

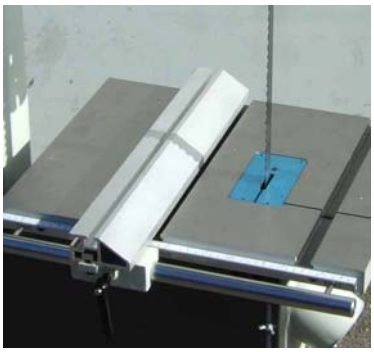

Fence

The bandsaw is supplied with an aluminum fence. Assemble the fence to the cast-iron bracket with the bolts and steel block provided. Adjustment and squaring of the fence will be covered later in the manual. Slide the bracket onto the round steel bar [attached to the table]. The fence is used to the left of the blade, so ensure that it is on the correct side of the table before locking in position with the ratchet handle provided. **Note**: The fence can be fitted so that it can be used in high or low position [also covered later in the manual].

Dust Collection

The bandsaw must be connected to a dust collection system or machine. As a general rule the stronger the extraction, the better; but 1,000 cubic feet a minute is the minimum that should be used. The diameter of the dust collection ports on the bandsaw are 4"

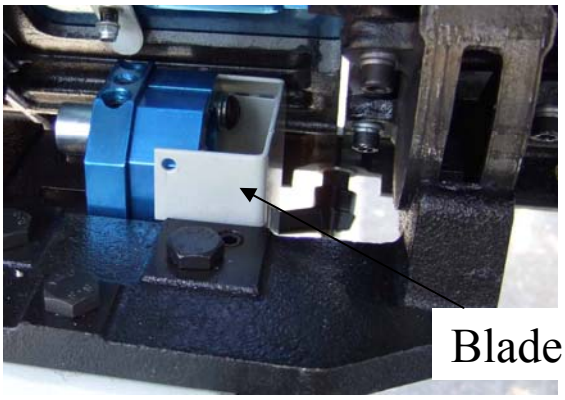

Bottom Blade Guards

It is very important to have the blade covered for safety. Guards are provided at the top of the lower door and just above the table dust port. The door guard must be moved vertically and clamped in position before operating the bandsaw. To open the door, the guard will have to be lowered.

Should the blade break, the guards protect the operator from the blade escaping under the table.

A third blade guard is provided which must be in position when running the machine. To fit or remove a blade, this guard will have to be removed.

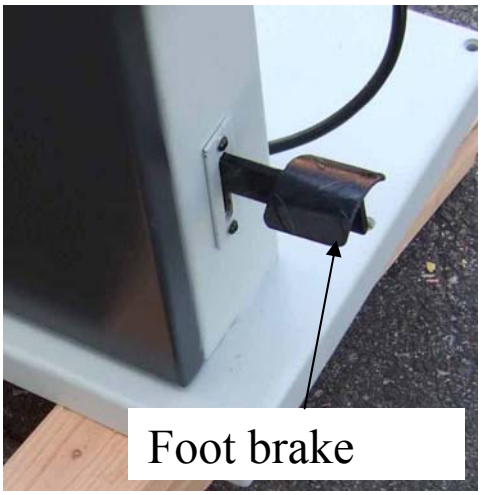

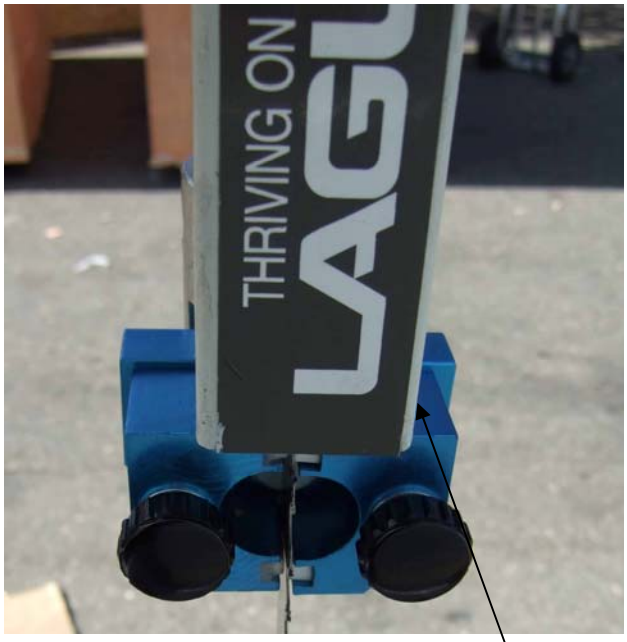

Foot Brake

A foot brake is attached to an arm inside the machine. As it is moved down, a switch removes power to the motor. Continued downward movement contacts a brake pad that slows the lower flywheel. Should the blade break, the foot brake only slows the lower flywheel and the upper flywheel may still be rotating, so care must be exercised when opening the doors.

Switch in
transport position

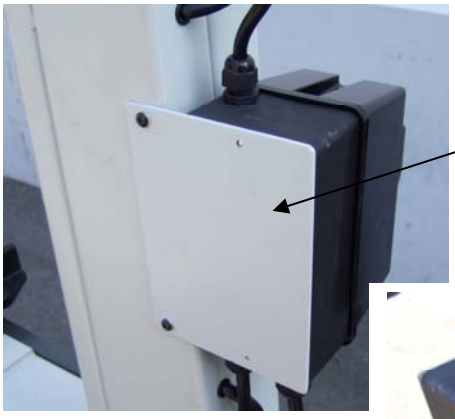

Switch in
operation
position

Electrical Connection

Note the machine is not supplied with an electrical plug, as the type of plug will be dependent on the installation.

The switch is mounted on the main pillar of the bandsaw in the incorrect position for operation. This is for transport reasons, and the switch will have to be moved to the operation position prior to starting the machine.
Remove the 2 screws, reposition the switch box and re-assemble the screws. Ensure that no strain is exerted on the cable during this procedure.
A qualified electrician must carry out the electrical installation. The main connection should be made using the cable supplied and a plug [not supplied] to suit your electrical supply. If you need a longer cable, you can connect a new cable into the switch box, but this must be installed by a qualified electrician. Ensure that the main supply corresponds with that of the machine, single-phase 220 V. If a longer cable is required, use the below table as a guide for the cable gauge.

Distance Wiring suggested
1 phase 0-10 ft 12/3
1 phase 10-15 ft 10/3
1 phase 15+ ft 8/3

All machines require the minimum of a 30-amp circuit breaker.

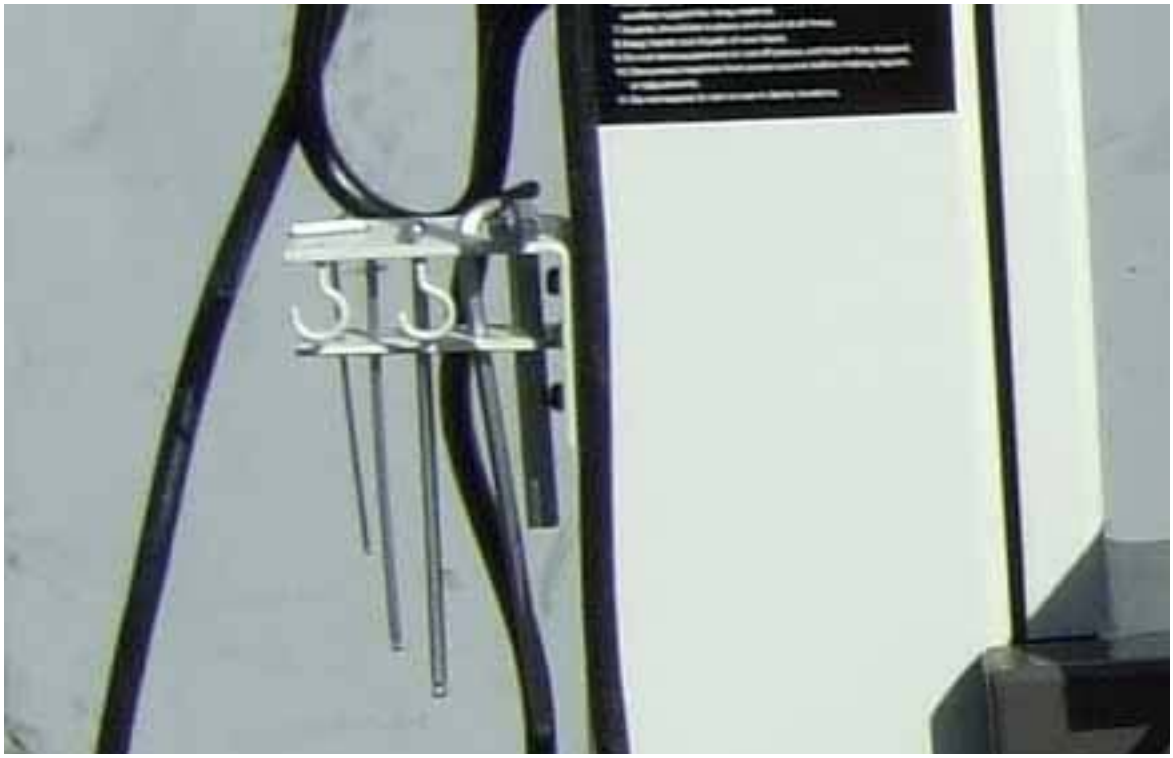

Assembling the Tool Storage Bracket

Install the tool storage bracket to the side of the vertical frame as shown with the 2 socket head screws and washers.

Before Starting the Machine

1. Read and understand the instruction manual before operating the saw.

2. If you are still not thoroughly familiar with the operation of the bandsaw, get advice from a qualified person.

3. Make sure the machine is properly grounded and that the wiring codes are followed.

4. Do not operate the bandsaw while under the influence of drugs, alcohol, medicine or if tired.

5. Always wear eye protection, safety glasses or a safety shield, and hearing protection.

6. Wear a dust mask; long-term exposure to the fine dust created by the bandsaw is not healthy.

7. Remove your tie, rings, watch and all jewelry. Roll up your sleeves; you do not want anything to get caught in the saw.

8. Make sure that the guards are in place and use them at all times. The guards protect you from coming in contact with the blade.

9. Make sure that the saw blade teeth point downward toward the table.

10. Adjust the upper blade guard so that it is just clearing the material being cut.

11. Make sure that the blade has been properly tensioned and tracked.

12. Stop the machine before removing the scrap piece from the table.

13. Always keep your hands and fingers away from the blade.

14. Make sure that you use the proper size and type of blade.

15. Hold the work piece firmly against the table. Do not attempt to saw stock that does not have a flat surface facing down, unless a suitable support is used.

16. Use a push stick at the end of a cut. This is the most dangerous time because the cut is complete and the blade is exposed. Push sticks are commercially available.

17. Hold the wood firmly and feed it into the blade at a moderate speed.

18. Turn off the machine if you have to back the material out of an uncompleted or jammed cut.

Machine Test

Now is the time to test the machine.

1. Close the doors.

2. Check that the foot break is in the fully up position. The machine will not start if the foot break is not fully up, as the safety switch will not be engaged.

3. Check that the red safety switch is in the fully out position.

4. Check that the machine is clear of all tools and other loose objects.

5. Check that all the adjusting and locking handles are tight.

6. Check that there is no blade fitted; it is far safer to test the machine without a blade fitted.

7. Start the bandsaw by pressing the green start button. and once started release the switch.

8. The lower flywheel is now turning.

9. Now is the time to check that all the safety switches are functioning correctly before you fit a blade. Never complete the following tests with a blade fitted as it could cause injury.

10. With the machine running [no blade fitted], operate the foot break. The motor should have the power removed and the lower wheel slowed down.

11. With the machine running [no blade fitted], operate the red stop switch by pressing toward the machine. The motor should have the power removed and slowed down.

12. If any of the safety switches fail to operate correctly, do not use the machine until the fault has been corrected.

Adjusting the bandsaw

Fitting a blade to the bandsaw

A lot of people do not like to change the blades and go to great lengths to avoid doing it. To use the bandsaw to its greatest advantage, you will have to use the appropriate blade and track it quickly. This is a habit that can be easily developed. If you use a step-by-step method of tracking, the procedure should only take a minute or two. Be careful when using blades, especially wide ones. Always use gloves and safety glasses.

Installing the blade

Disconnect the power to the bandsaw.

Adjust the side guide and back guide out as far as they will go [both upper and

lower guides]. This will ensure that they do not interfere with the blade while you are fitting, tracking and tensioning the blade.

1. Uncoil the blade. Remember to use gloves and safety glasses. The blade may have dirt or oil on it, so by using a clean rag, clean the blade and pull rearwards so that the cloth does not hook on the teeth.

2. Inspect the teeth and the general condition of the blade. If the teeth are pointing in the wrong direction when you hold the blade up to the machine, you will have to turn it inside out. To do this, hold the blade with both hands and rotate.
Remove the table split clamp. This clamp is used to ensure that the table does not warp and must always be re-assembled to the table.

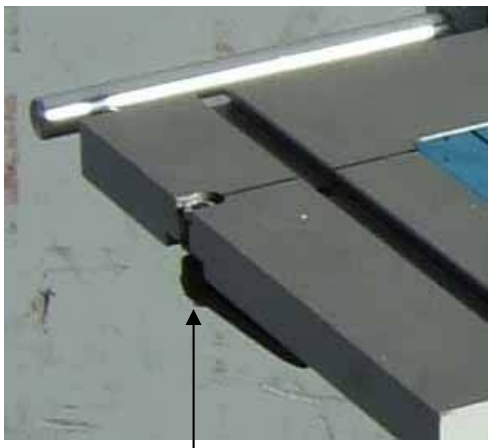

Table split clamp

3.Remove the blade guards and raise the blade quick release lever.

Blade tracking adjustment handle

4.With the guards removed and the table insert removed, hold the blade with both hands with the teeth towards you. Slide it through the table slot and place it on the wheels. Hang the blade on the top wheel and then line it up with the lower wheel. If the top wheel needs to be lowered, rotate the tension handle wheel.

4. Apply tension to the blade by lowering the blade quick release lever. adjusting the tension hand wheel. Do not fully tension the blade at this stage.

Blade quick release lever

5. Start rotating the wheels by hand in the normal direction.
As you do this, watch the blade to determine where the blade wants to track. If the blade is tracking too far forward or backward, make small adjustments with

the tracking adjustment knob located at the back of the bandsaw while still rotating the wheel. Once the blade is tracking in the correct position, fully tension the blade and re-track.
Note: The blade must be fully tensioned for final tracking.
Note: Never track the blade with the saw running.

6. Lock the tracking adjustment handle.

Blade tension indicator

7. Tensioning the Blade
The blade tension indicator, mounted on the inside of the bandsaw in the top right-hand corner is used as a general guide, and the following tensioning procedure is recommended. Looking at the top wheel, place your finger at the 9 o'clock position. Move your finger down 6" and using moderate pressure with your thumb, press on the flat of the blade. You should get 3/16" to ¼" of deflection.

8. Note: If you are not using the bandsaw for extended periods of time [overnight], remove the tension on the blade. This will increase the life of your blade and the machine. If tension is left on the machine, flat spots or grooves can be formed in the rubber of the wheels which will detract from the performance of the machine and in extreme cases cause vibration when the machine is run.

9. Assemble all the guards and close the doors. Move the door blade guard up and lock in position. Replace the table insert, and check that the blade moves freely through the table insert.
Replace the table split clamp. **Check** that all wrenches and loose parts are removed from the machine.

10. Plug the machine into the power, turn the machine on for a second and switch off. Watch how the blade runs. If the blade tracks well, then run the machine at full power.

Removing the Blade from the Bandsaw

1. Disconnect the power to the bandsaw.

2. Remove the table split clamp that aligns the two table halves.

3. Remove all the guards.

4. Remove the table insert.

5. Remove the tension on the upper flywheel.

6. Open the doors and remove the blade from the wheels [use gloves and eye protection], and gently slide the blade through the table slot.

Tracking position of the blade on the wheels

Tracking large blades. There has been a lot of discussion on the position that the blade should be on the wheels. One group of people recommends that with large blades you should track the blade so that the teeth hang just over the front edge of the rubber. The second group recommends that all blades regardless of their size should run in the center of the wheel. The advantage of running the large blades with the teeth not contacting the rubber of the wheel is that they cannot damage the tire. The disadvantage is that the wheel is crowned and the blade is not tensioned in the center of the band, which gives the blade a tendency to wobble or flutter. The advantage of running large blades on the center of the wheels is that they are tensioned in the center of the band and have fewer tendencies to wobble and flutter. The disadvantage is that blades with a large set on the teeth have a tendency to damage the rubber of the tire. This does not have a great effect on the performance of the bandsaw as all blades are running on the center section of the tire which is not affected. We recommend that you balance all blades on the center of the wheels for optimum performance and a smoother cut.

Adjusting the Blade Guides

Introduction

Welcome to a new era in bandsawing. You have purchased a bandsaw with a revolutionary blade guide system that is designed to give you years of safe, high quality bandsawing. Most blade guides are designed to support the blade on the sides and either above or below the side guides at the back of the blade. This can allow the blade to twist as pressure from the wood being cut pushes against the back blade guide. The Laguna Guide eliminates this by supporting the blade above and below the back blade guide, giving the blade unsurpassed stability. The Laguna Guide also incorporates patented ceramic as the blade support material. The advantage of this material is its ability to resist wear, and with care it should give years of safe service.

Please read the following notes, as they will assist you in getting the optimum performance from your Laguna guide system.

1. As with the roller guide systems, the Laguna guide system will damage your blade if it is not adjusted correctly. The guide blocks must not come in contact with the teeth of the blade. It is advisable to run the blade by hand with the guide blocks completely clear of the blade, and only when you are completely sure that the blade is running consistently in the correct position, you may then adjust the surround guide blocks as detailed in this manual. Note do not lubricate the ceramic guide blocks.

2. When fitting a new blade to your bandsaw, adjust the guide blocks and run the blade by hand through the guide blocks for at least 2 complete revolutions. **Note:** The weld on a new blade may not be perfectly aligned, and the misalignment could hit the ceramic blocks [side and back], causing damage to the blocks and or the blade. If the blade has a bad weld, return it to your blade supplier or side dress and file the back of the

blade as needed.

3. The back blade guide is manufactured from ceramic, so as the blade pushes against it, friction between the blade and the ceramic occurs. This action generates a certain amount of sparks. This is normal and will become less with time as the back of the blade guide smoothes out the back of the blade.

4. The back blade guide will slowly form a small grove as the blade is used [this is normal]. It is recommended that for approximately every 8 hours of use the guide be rotated 15 degrees. This will insure that the grove does not become too deep and will greatly extend the life of your guide.

5. The Laguna guide system can be used with ¼" to 1¼" blades.

6. The Laguna guide system uses ceramic to support and guide the blade. This has many advantages, [very poor conductor of heat, very resistant to wear, etc.] The disadvantage is that it is very brittle, so the guides must never be dropped, exposed to hard knocks, hit with hard objects or used with badly welded blades. Any of the above actions may cause the ceramic to chip or break and will detract from the performance of the Laguna guide system. Any mistreatment of the guide system will render the warranty void.

7. The side guide blocks must be tightened before running the machine to avoid jamming the blade and damaging the machine and/or guide blocks
.

8. When cutting gummy or green wood, the blade can become covered with resin. You will find that the surround guide system ceramic blocks remove the resin as the blade is moved through the guide blocks and keep that part of the blade clean. For this reason it is recommended that the blocks be adjusted as close to the gullet as possible but the teeth must not come in contact with the blocks as they will become damaged. Although the guide blocks clean the blade, some woods will still gum the blade and the resin will have to be removed with solvent.

Adjusting the Blade Guides

The blade should run through the center of the rear blade guide, and the side guides should be parallel with the blade. If they have been moved out of adjustment, adjust as follows:

Top Upper Side Guides Parallel Adjustment.

Loosen the clamp screw that attaches the guide to the vertical shaft and rotate the assembly until the side guide is parallel to the blade. Retighten the clamp screw. There is no adjustment on the lower guides. You are now ready to adjust the guides to the blade.

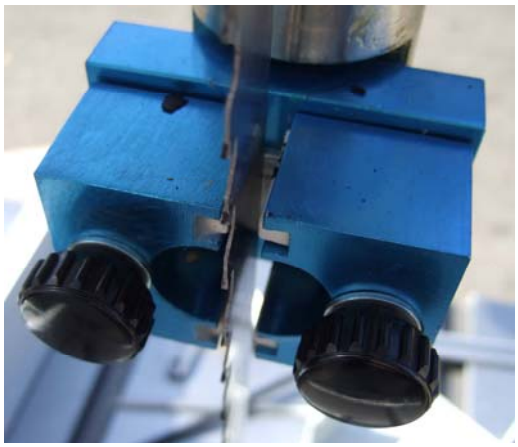

Top Guide

1. Loosen the side guides

2. Rotate the blade by hand and ensure that it is tracking consistently in the correct position.

5. Loosen the rear guide clamp screw and push the guide forward so that it just touches the back of the blade. Tighten the guide in position.

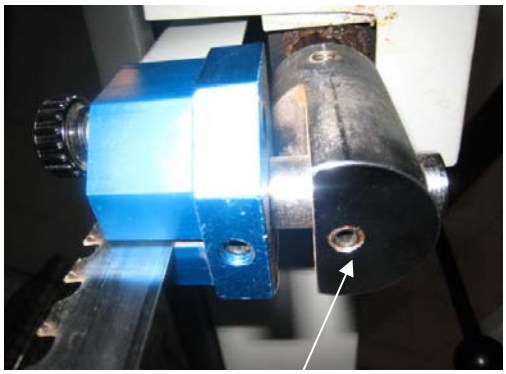

Rear guide clamp screw

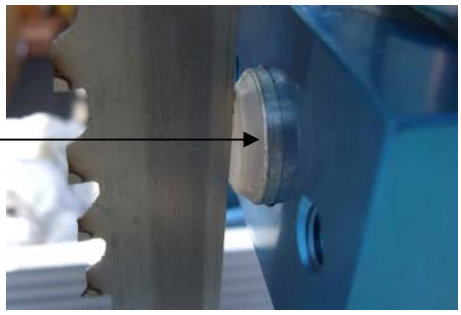

Rear blade guide shown with the side guides removed

3. Loosen the guide clamp screws that allow the back guide to move forward and back.. Adjust so that the ceramic blocks are just behind the gullet of the tooth and retighten the clamp screws.

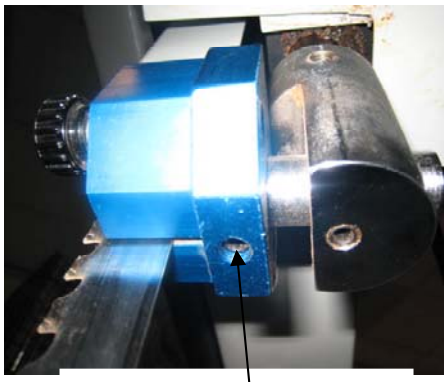

Guide clamp screw

4. Gently push one side guide so that it touches the blade and lock it in position. Bring the other guide toward the blade so that there is minimal clearance between the blade and the guide. You can use a thin piece of paper to put between the blade and the guide to obtain the correct clearance until you gain experience. Tighten the clamp screws and remove the paper. Rotate the blade by hand ensuring that the weld of the blade does not hit the ceramic blocks, as this will cause damage. If the blade has a bad weld, dress the blade or return it to your supplier.

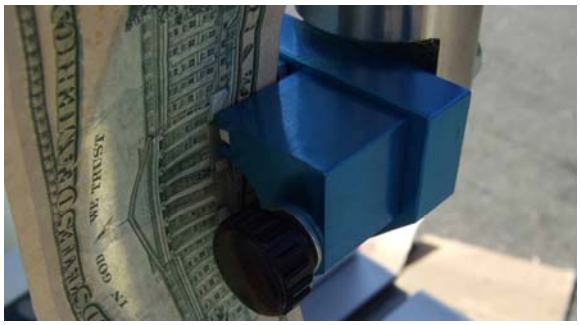

6. Rotate the blade by hand and check that the back of the blade does not hit the blade guide with a bad weld. If the back of the blade hits the back blade guide at the weld, then dress the blade or, in excessive cases, return the blade to the supplier.

Lower blade guide

1. Rotate the blade by hand and ensure that it is tracking consistently in the correct position.

2. Loosen the side guides.

3. Loosen the 2 clamp screws that allow the guide assembly to move forward and back. Adjust it so that the ceramic blocks are just behind the gullet of the blade and retighten the clamp screws.

Forward & back clamp screws

4. Place a dollar bill or piece of paper of similar thickness between the guide blocks and the blade. Gently bring both side guides toward the blade so that slight pressure is exerted on the blade. Tighten the clamp screws and remove the paper. Rotate the blade by hand, ensuring that the weld of the blade does not hit the ceramic blocks, as this will cause damage. If the blade has a bad weld, dress the blade or return it to your supplier.

5. Loosen the rear guide clamp screw and push the guide forward so that it just touches the back of the blade. Tighten the guide in position.

6. Rotate the blade by hand and check to see that the back of the blade does not hit the blade guide with a bad weld. If the back of the blade hits the rear blade guide at the weld then dress the blade or in excessive cases return the blade to the supplier.

Note: Rotate the back guide by approximately 15 degrees after every 8 hours of use. This will greatly extend the life of the back blade guide, as it will even out the wear.

Before you cut any wood, read the safety rules at the front of this Manual.

Using the bandsaw

Although the bandsaw is usually associated with cutting curves, a variety of straight cuts are easily made with the saw. In fact, it is often used to rip wood because it is much safer than a radial arm saw and also has a smaller saw cut, so wastes less wood. This becomes very important when using expensive wood where wastage must be kept to a minimum. The cut is safer because the force of the cut is straight down on the table, the work cannot be pulled back or kicked back which sometimes happens with table or radial arm saws. The bandsaw can also cut very thick stock, which the radial arm, or table saw cannot do. The disadvantage of cutting with the bandsaw is that the surface finish of the cut is

not as good as with the table or radial arm saw. This can be overcome to a great degree by using the Resaw king blade from Laguna. The blade has many of advantages such as superior surface finish to the cut, thin kerf [low wood wastage], can be re-sharpened, will cut hard woods and has a long life.

Ripping

Ripping is a cut made with the grain of the wood. The four most common cuts made with the grain of the wood are rip, bevel, taper and resaw cuts.
There are two frequently used techniques for making straight bandsaw cuts. One technique is to use a single point to guide the work. The rational for using a single point is that the saw may tend to cut at a slight angle. This is called drift or lead. The single point allows the operator to compensate for the drift and cut the wood straight. With a little practice, you will obtain satisfactory results using this method. However, you now own a real bandsaw, so this method is not recommended. Another method is to use the rip fence as a guide. Once set up, this takes the guesswork out of cutting, reduces the stress on the operator and is a must for
volume work. Once you have mastered the setup procedure, you will tend to use the single point method less and less.

Adjusting the fence
Method 1

1. Make a straight pencil line on the edge of a board.

2. Feed the wood into the blade cutting next to the pencil mark. If the blade is drifting, you will have to compensate by angling the wood to keep the cut straight.

3. Stop the cut in the middle of the wood and mark [with pencil] the angle on the table. This is the angle of drift and you will have to set the fence to the pencil line.

4. To adjust the fence, loosen the clamp bolts that attach it to the cast-iron bracket. Move the fence so that it lines up with the pencil mark on the table and retighten the clamp screws.

Method 2

1. Set the fence parallel with the blade by loosening the clamp screws that hold it to the cast-iron bracket. It is not important that it is exact because you will be readjusting later in the procedure.

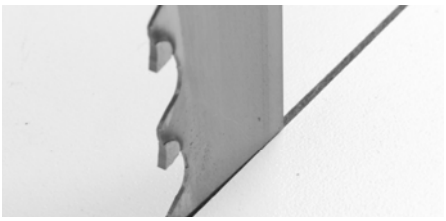

Blade not centered in saw cut

2. Using a piece of scrap wood, make a cut while holding the wood against the fence. Stop the cut in the middle of the wood.

3. Look at the position of the back of the blade within the saw cut. The back of the blade should be in the center of the slot, but you will probably find that it is closer to one side.

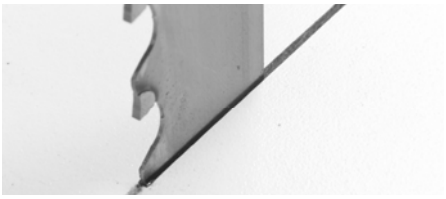

Blade centered in saw cut

4. Slightly loosen the clamp screws and adjust the fence to compensate.

5. Repeat 2, 3 and 4 until the blade is centered. **Note:** you may have to do several fine adjustments, and it is better to do several small adjustments until you become skilled at the procedure. Once you have mastered the process, it should only take a minute to perform the adjustment.
Note: Each blade has a slightly different drift, and each time you change a blade, you must check and readjust if necessary.
Note: It is worth taking the time to set the fence accurately as it will save frustration and enhance the performance of your machine.

Fence positions

The aluminum fence can be used in two height positions [high and low]. The low position is handy for cutting thin wood and is used where the fence in the high position would make it awkward to complete cuts. The fence in the high position is used for supporting tall work.

Changing the Fence Height

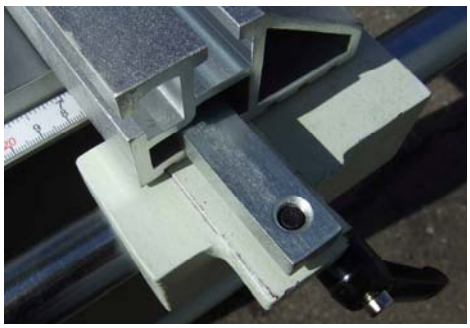

1. Loosen the two clamp screws that are located on the cast-iron bracket.

2. Slide the aluminum fence off the cast iron bracket.

3. Slide the aluminum fence back onto the bracket using the second slot and retighten the clamp screws.

Resawing

Resawing is the process of cutting a board in half along its height. The bandsaw is perhaps the most creative tool in the shop because of its ability to cut thick or thin, straight or curved. The ability to cut thick stock such as re-sawing, making veneers, book matching or cutting flitches from small logs has great appeal to the woodworker. These capabilities greatly enhance the woodworker's design ability without the need for additional equipment. When a board is resawed and the two pieces are lying next to each other, you will note that they are mirror images of each other. When these two boards are glued together, it is called book-matching.
Note: It is unsafe to cut wood that is unsupported by the table and should never be attempted. This is especially important to note when cutting round logs.

Blades

Introduction

The selection and use of blades is a very extensive subject and there have been many books written on it. This section of the manual is intended as a general guide only.

Selecting a Blade

Using the correct blade is important, as it is the first step in attaining good bandsaw performance. The most frequently asked question is "How do I decide on the correct blade to use?" The answer is not simple, and we will explore it in

this section of the manual. Firstly, there is **NO** ideal blade that will do everything. The blades that you choose will be determined by the type of work that you are doing. Large-tooth wide blades are selected for fast course cuts, and fine thin blades are used for intricate scrollwork. You will find that you will need a large selection of blades if you do a lot of varied work and fewer blades if you are concentrating on one section of band-sawing such as re-sawing. Using the wrong blade is the best way to abuse it. Using a blade for its intended purpose allows for maximum efficiency and is the best way to prolong its life.

Blade terms

Set

The amount that the teeth are wider than the thickness of the backing material. The larger the set the larger the saw cut and the smaller the radius that can be cut. This can also be an advantage if you are cutting a job that has a tendency to nip the blade. The smaller the set, the smaller the saw cut and the larger the radius that can be cut, the wood that is wasted is less. On tipped blades [Resaw king] there is no set as the tip is wider than the backing material.

Thickness

The thicker the blade, the stiffer the blade and the straighter the cut. The thicker the band, the greater the tendency for the blade to break.

Pitch

The size of the teeth. This is usually quoted in teeth per inch [T.P.I.] The larger the tooth, the faster the cut because the tooth has a large gullet and has a greater capacity to transport large amounts of sawdust through the job. The larger the tooth, the courser the cut and the poorer the surface finish of the cut. The smaller the tooth, the slower the cut as the tooth has a small gullet and can not transport large amounts of sawdust through the job. The smaller the tooth, the finer the cut and the better the surface finish of the cut

Material Hardness

When choosing the blade with the proper pitch, one factor you should consider is the hardness of the material that is being cut: the harder the material, the finer the pitch that is required. For example, exotic hardwoods such as ebony and rosewood require blades with a finer pitch than American hardwoods such as oak or maple. Soft wood such as pine will quickly clog the blade, decreasing its ability to cut. Having a variety of tooth configurations in the same width will most likely give you an acceptable choice for a particular job. There are certain things that indicate if a blade has a proper pitch, too fine a pitch or too coarse a pitch. Some are listed below:

Proper Pitch

Blades cut quickly.
A minimum amount of heat is created when the blade cuts.
Minimum feeding pressure is required.
Minimum horsepower is required.
The blade makes quality cuts for a long period.

Pitch is Too Fine

The blade cuts slowly.
There is excessive heat which causes premature breakage or rapid dulling.
Unnecessarily high feeding pressure is required.
Unnecessarily high horsepower is required
The blade wears excessively.

Pitch that is Too Coarse

The blade has a short cutting life.
The teeth wear excessively.
The bandsaw vibrates.

Width

The dimension from the back of the blade to the front of the teeth. The wider the blade, the stiffer the blade and the straighter the cut. This is usually called

beam strength. But wide blades cannot cut small radiuses.
The narrower the blade, the more flexible the blade and the greater the tendency the blade has to wander. These have low-beam strength, but can cut small radiuses. Blades are available from 1/16" up for your machine, but for very narrow blades the normal guides have to be replaced with cool blocks [not supplied with the machine].

Kerf

The width of the saw cut. The larger the kerf, the smaller the radius that can be cut, the greater the amount of wood the blade has to be removed by the blade and the greater the horse power that is needed because the blade is doing more work. The greater the kerf, the larger the amount of wood that is being wasted by the cut.

Hook or Rake

The cutting angle or shape of the tooth. The greater the angle, the more aggressive the tooth and the faster the cut. But the faster the cut, the faster the tooth will blunt, and the poorer will be the surface finish the cut will have. Aggressive blades are suitable for soft woods but will not last when cutting hard woods. The smaller the angle, the less aggressive the tooth, the slower the cut and the harder must be the wood that the blade is suitable to cut. Hook teeth have a progressive cutting angle and take the form of a progressive radius. They are used for fast cutting where finish is not important. Rake teeth have a flat cutting angle and are used for a fine surface finish of the cut.

Gullet

The area in which the sawdust has to be transported through the wood, the larger the tooth [pitch], the bigger is the gullet.

Relief

The angle from the tip of the tooth back. The greater the angle, the more aggressive the tooth but the weaker the tooth.

Beam Strength

This is the ability of the blade to resist bending backwards. The wider the blade, the stronger the beam strength; therefore, a 1" blade has far greater beam strength than a 1/8" blade and will cut straighter and is more suitable for resawing.

Blade Selection

As you will have seen from the previous section, there are a great number of variables. The blade selection that you will make will greatly depend on the type of work that you are doing or intend to do with your machine. If you have experience with the bandsaw, you will probably have a good idea of the blades that are suitable for you. If you lack the experience or are unsure of the type of work you will be doing with your machine, we recommend that you purchase a selection similar to that listed below, which is a good general selection and will tackle most jobs. As you gain experience, you will settle on the blades that suit you.

1. ¼" 6 T.P.I. This is a small aggressive blade that is suitable for tight curves and fast cutting where a good surface finish of the cut is not important.

2. ¼" 14 T.P.I. This is a small fine blade suitable for reasonably tight cuts were the surface finish is important but speed of cut is less important.

3. ½" 3 T.P.I. This is a general-purpose blade that can cut large radiuses and short sections of straight cuts. The cut is fast and the surface finish of the cut is poor.

4. ¾" 3 T.P.I. This is a general-purpose blade, which will be used for straight cuts and is suitable for large radiuses.

5. 1" 2 T.P.I. This is a re-saw blade, which will be used for straight cuts and is suitable for processing veneers.

6. If you are going to be cutting hardwoods or require superb surface finish then you should consider purchasing a Resaw king blade from Laguna.

Rounding the Back of the Blade

With most guide systems it is recommended that the back of the blade be

rounded with a stone. As the machine is supplied with Laguna ceramic guides, this is not imperative because the ceramic will round the back of the blade as it is used. However, if you decide that you want to round the back of the blade, a procedure, follows: A round blade back creates smooth interaction between the thrust bearing and the blade. If the blade rotates slightly, there is no sharp blade corner to dig into the thrust bearing; also, the rounding process smoothes the weld. A blade with a round back makes tight turns better because the round back has smooth interaction with saw kerfs. After the guides have been adjusted and the machine is running, hold the stone against the back corner of the blade for about a minute. Wear safety glasses when rounding the blade. Then, do the same thing on the opposite corner. Next, slowly move the stone to round the back. The more pressure you put on the back, the faster you will remove the metal. Be careful that the inside of the machine is free of sawdust because sparks could start a fire. On small blades such as a 1/8" blade, the pressure on the back of the blade may bring the blade forward off the front of the wheels.
Therefore, be careful not to put too much pressure on the stone. When doing this, it is also important that the upper guides be positioned right above the stone.
The blade has teeth and extreme caution must be exercised, as your hands will be very close to them.

Causes of Blade Breakage

• Excessive blade thickness in relation to the flywheel diameter.
• Defective welding.
• Incorrect tension, particularly if the blade is over tensioned, the tension spring no longer fulfils its function.
• After use it is recommended that you slacken the tension, especially overnight (placing a visible notice of this operation).
• Misalignment of the flywheels.
• Irregularity of flywheel surface, e.g., an accumulation of sawdust while cutting resinous materials.
• You can correct these problems by readjusting the machine, changing the way you operate it, or by changing the blade. Try only one change at a time.

Causes of the Blade Dulling

• Poorly set side guides and/or rear thrust guide.
• Poor tracking.
• Wrong blade selection. If the blade is too narrow, it will flex more easily and decrease the quality of the cut. The blade should also have the correct pitch and width.
• The tooth pitch is too fine (too many teeth per inch).
• Certain woods will dull a steel blade very quickly, specially tropical hardwoods [teak, koa, etc]. Other woods with a high silicon content will also dull the blade quickly; even a cut as short as 6" will cause damage to the blade.
• On certain exotic woods the ends have been painted. This is done to control the drying. The paint is very abrasive and will dull the blade is you cut through it. It is recommended that you cut the painted ends off your wood.

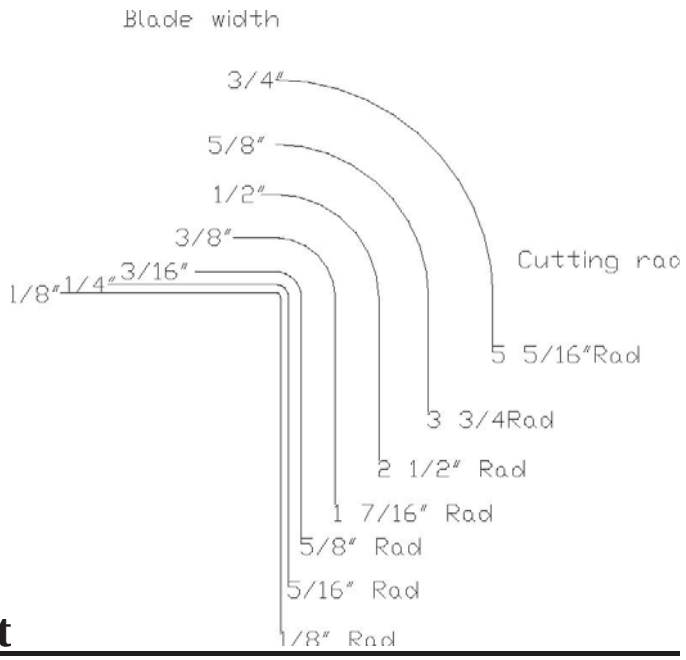

Using a Radius Chart

Until you become well acquainted with your saw, it is best to use the contour (radius) chart to determine which size blade to use for a specific application. Radius charts can be found in many woodworking books, magazine articles, and on blade boxes. They differ slightly from one another but are good as rough indicators of how tightly a curve can be cut with a particular blade. Each blade

saw, and operator is different, so it is impossible to make a truly accurate chart. A blade can cut continuously without backtracking any curve that has a radius as much as or more than is shown on the chart. For example: a 3/16" blade will cut a circle with a 5/16" radius or a 5/8" diameter. To test if a 3/16" blade would work for a particular curve place a dime, this is roughly 5/8" over the pattern. The 3/16" blade can cut a curve bigger than the dime, but not smaller. You can use everyday items such as coins or a pencil to determine which blade to use. A quarter is the size of the tightest cut that can be made with a ¼" blade. A dime is the size of the tightest curve that can be cut with a 3/16" blade. A pencil eraser is the size of the tightest turn that you can make with a 1/8" blade. After a while you won't even need an object to size the possible curve of a blade because you will have become familiar with this process. There are options to matching the blade to the smallest curve pattern. If there is only one very tight cut, it may be best to use a turning hole, a relief cut, successive passes, or to change the blade. If you have a lot of cutting to do, you can use a wider blade for the bigger curves and then switch to a narrower blade for the tighter curves. Changing the blades can often save cutting and finish time. The chart above, is only a rough guide and is **not to scale,** but from the information you can construct your own guide.

Maintenance and Troubleshooting

All tools and machines require regular maintenance, and the bandsaw is no exception. This section details the general maintenance and care of your bandsaw. In general, we recommend that you only use a Teflon-based lubricant on the bandsaw. Regular oil attracts dust and dirt and the Teflon tends to dry and has fewer tendencies to accumulate dirt and sawdust on your machine. Note do not lubricate ceramic guide blocks.

Cleanliness and Tire Maintenance

One of the major concerns is the cleanliness, in particular, how clean the tires are. As the saw cuts, some sawdust lands on the tire of the lower wheel. As the wheel rotates, the sawdust becomes compressed on the tire. This is especially true for woods such as pine. The compressed sawdust could have a negative effect, such as vibration, short blade life and drifting of the blade. A brush contacts the lower wheel and helps to prevent buildup. You should inspect the tires regularly to check that buildup is not happening, especially the lower wheel. The tires are made of rubber and wear just like car tires. They wear in

the middle, which causes a concavity in the tire. The deformation makes it hard to track the blades, and for this reason it is important to maintain the original shape of the tire. The best way to clean the tire surface and maintain the original shape is to sand it with sandpaper. The old tire surface often hardens and glazes over and should be redressed occasionally. This can be done by sanding the wheel with 100-grit sandpaper. This will take off a little of the rubber and expose new rubber, which is desirable. Rotate the wheels by hand with the blade removed.

Guides

The ceramic side and back guides should be inspected regularly for cracks and chips. If they are damaged, they should be replaced as they could damage your blades and bad guides will detract from the performance of the bandsaw. The guides should be cleaned regularly and any wood gum or dirt removed. Any commercially available solvent can be used.

Drive Belt(s)

The drive belt should last for many years [depending on the usage] but needs to be inspected regularly for cracks, cuts and general wear. If damage is found, replace the belt. If your machine is a 2-belt system, then both belts must be replaced at the same time, as they are a matched pair. Never change only one belt as this could cause vibration.

Replacing the drive belt(s)

To replace the belt/s you will have to remove the lower wheel.

1. Remove the allen screw that clamps the wheel to the axel.

2. Using a gear puller remove the lower wheel. Take care not to damage the clamp screw thread.

3. Replace the drive belts.

4. Refit the lower wheel and re-clamp with the allen screw.

It is better to replace the drive belt/s early than to have a breakdown during an important job.

Table Insert

The table insert [throat plate] is made of aluminium and is designed to reduce damage to the blade should they come in contact. If the blade slot becomes too wide or the insert becomes damaged by the blade, it should be replaced. The replacement insert will have to be fitted to the table hole, The insert is provided with 4 jacking screws that can be adjusted so that the insert is level with the top of the table.

Bearings

All bearings are sealed for life and do not require any maintenance. If a bearing becomes faulty, replace it.

Rust

The bandsaw is made from steel and cast iron. All non-painted surfaces will rust if not protected. It is recommended that the table and fence bar be protected by coating them with wax if the machine is not in constant use. All moving non-painted surfaces [guides, rack and pinion, etc.] should be lubricated/protected with a Teflon based lubricant. Do not lubricate the ceramic guide blocks.

Rack and Pinion

The bandsaw is fitted with a rack and pinion, which rises and lowers the upper guides. It should run smoothly. If there is excessive play or it is too tight, the following adjustment can be made.

1. Loosen the allen screws that clamp the vertical adjustment handle to the band saw.
2. There is clearance in the holes and the vertical adjustment handle can be adjusted.
Note: the machine comes factory-set, and no adjustment should be required.

Top Guide Vertical Adjustment Shaft

The top guide when moved vertically tracks the blade and comes factory-set. Adjustment is provided should that mechanism become misaligned.. This is a tricky operation and should only be attempted if an extreme error has occurred.

Adjustment Procedure

1. With the guide at its highest position, adjust the side guides so that there is approximately 1/16" clearance on each side.
2. Adjust the back guide so that it is 1/16" behind the back of the blade.
3. Attach a piece of paper to the table with scotch tape/ masking tape in the area covered by the blade guide.
4. Lower the guide and mark its position on the paper. This will give you a reference point to work from.
5. Move the guide up and down and note any change in the relationship between the blade and the guide [both side and back].
6. Only if adjustment is needed, loosen the two bolts on the guide plate and move the guide back/forward, left/right depending on the adjustment needed.
7. Tighten the two bolts on the guide plate, move the guide up, down, noting the relationship between the blade and the side and back guide.
8. If the adjustment needs to be refined, repeat the procedure.

Troubleshooting: Bandsaw will not Start

1. Check that the start switch is being fully depressed.

2. Check that the red stop switch is fully out.

3. Check that the electrical power cord is plugged into the power outlet.

4. Check that the electrical supply is on [reset the breaker].

5. Check that the foot brake is fully in the up position.

7. With the power disconnected from the machine, check that the wiring in the terminal box is correct. Check that the rubber insulation is stripped enough and is not causing a bad connection. Check that all the screws are tight.

8. Test the safety circuit. With the power disconnected from the machine, use a multi-meter / circuit tester, to check that there is continuity between 5L3 [red wire] and the red wire beside 2T1. To gain access to the terminals, you will have to remove the switch plate from the front of the switch box. This circuit is a loop that has the foot brake and stop switch. It is designed to be fail-safe, and any switch that is not functioning or set correctly will cause the machine not to start. If there is no continuity you will have to trace the switch that is open or faulty and correct the fault.

9. Check that you have the correct power 220V not 110V

10. Check that the earth wire is wired correctly.

The Machine will not Stop

This is a very rare occurrence as the machine is designed to be fail-safe. If it should occur and you cannot fix the fault, seek professional assistance. The machine must be disconnected from the power and never run until the fault has been rectified.

1. Stop switch faulty. Replace the stop switch.

2. Internal breaker faulty. Replace the breaker.

Motor Tries to Start but will not Turn

1. With the power disconnected from the machine, open the doors and try to turn the wheel by hand. If the wheel is not turning, check the reason for the jamming. Typical reasons are: guides too tight, wood jammed in the wheel.

2. Capacitor faulty. Replace the capacitor.

3. Motor faulty. Replace the motor.

Motor Overheats

The motor is designed to run very hot, but should it overheat it has an internal terminal overload protector that will shut it down until the motor has cooled down and then it will reset automatically. If the motor overheats, wait until it has cooled down and restart. If the motor shuts down constantly, instantly check for the reason. Typical reasons are dull blade, overfeeding the wood, motor cooling fan clogged or faulty, motor cooling fins clogged and excessive ambient temperature.

Squeaking Noise

1. Check that the motor cooling fan is not contacting the fan cover.

2. Check the bearings.

3. Check the drive belt.

4. Check that the guides are adjusted correctly.

Upper guide Shaft is Tight or Loose

1. Clean and lubricate.

2. Adjust rack and pinion.

3. Bent rack. Replace the rack.

Blade Slows Down During a Cut

1. Loose drive belt. Re-tension the belt.

2. Dull blade. Replace the blade or have it re-sharpened.

3. Feeding the wood too fast. Slow down the feed rate.

4. Insufficient set on the teeth [wood nipping the blade]. Change blade for a blade with the correct set.

5. Oil or dirt on the drive belt. Clean or replace the drive belts.

6. Fence not aligned correctly. Align fence.

Blade will not Track on Flywheels

1. Bad blade. Change the blade.

2. Crown on the wheels worn or damaged tire. Dress the tires.

The Blade Kicks

Bad blade. Replace the blade.

The Blade Makes a Clicking Noise

Bad weld. Dress the weld or change the blade.

Blade Overheats

1. Dull blade. Change the blade or re-sharpen the blade.

2. Pitch is too small for the depth of cut. Change to a blade with the correct pitch.

3. Guides too tight. Adjust the guides.

4. Wood too hard for the selected blade. Change the blade.

5. Blade too thick for the diameter of the wheels. Change the blade.

Machine Vibrates

1. Machine not level on the floor. Re-level the machine ensuring that it has no movement.

2. Damaged drive belt. Replace the belt.

3. Double drive belt system. Only one belt changed and the belts are not balanced. Replace both belts with a matched pair.

Accessories

The following accessories are available from Laguna Tools.
Miter gage
Mobility kit.
Extension tables.
Work benches.
Bandsaw blades.
Cool blocks.
Large Laguna Guides.
Power feeder.
Drift master fence.

Electrical System Drawing

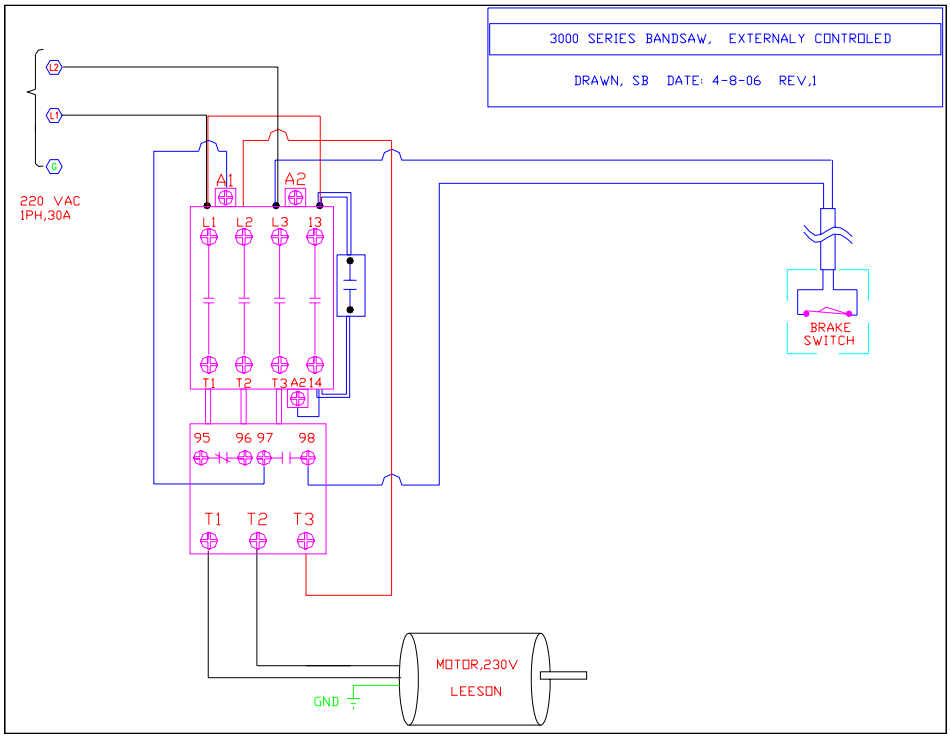

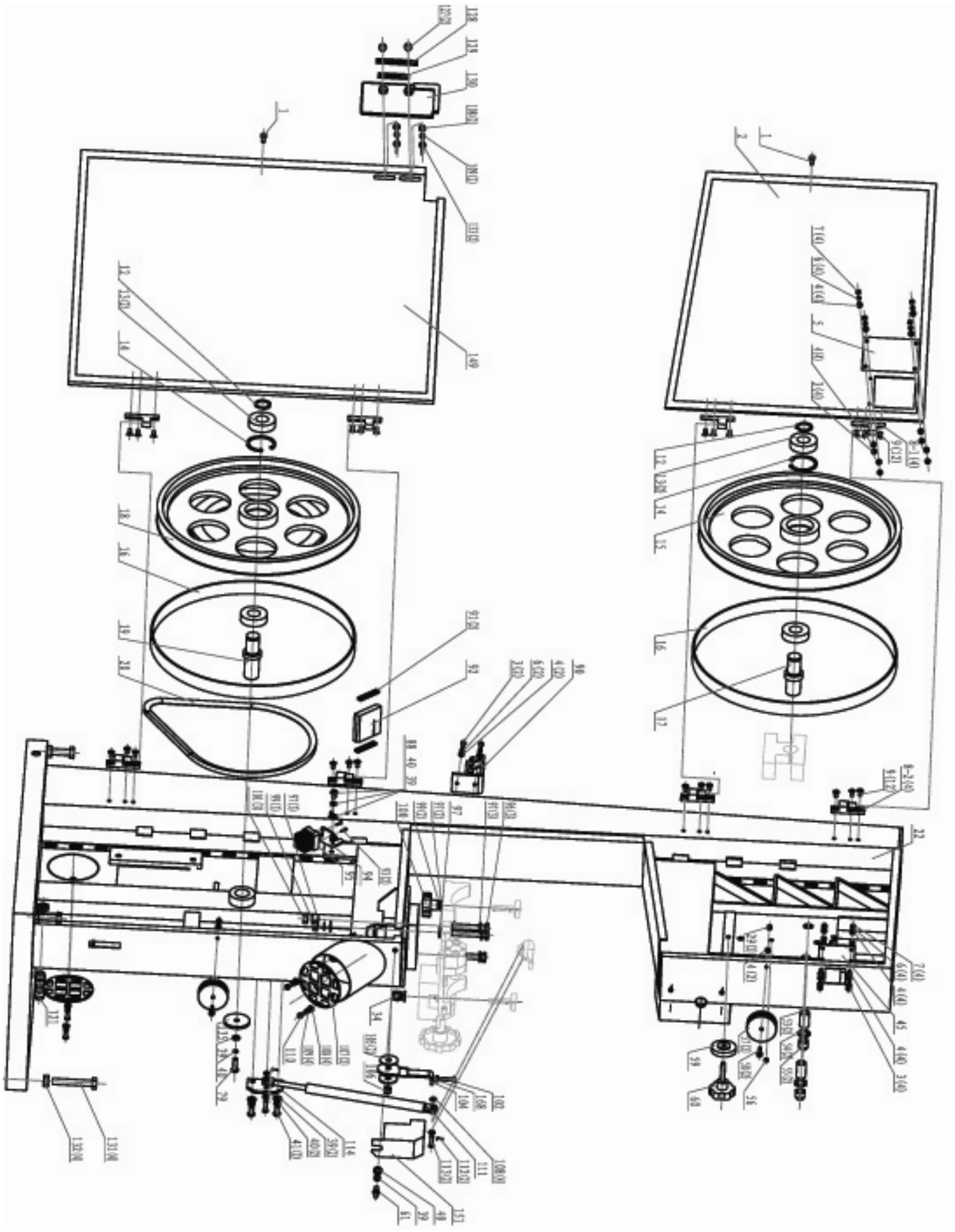

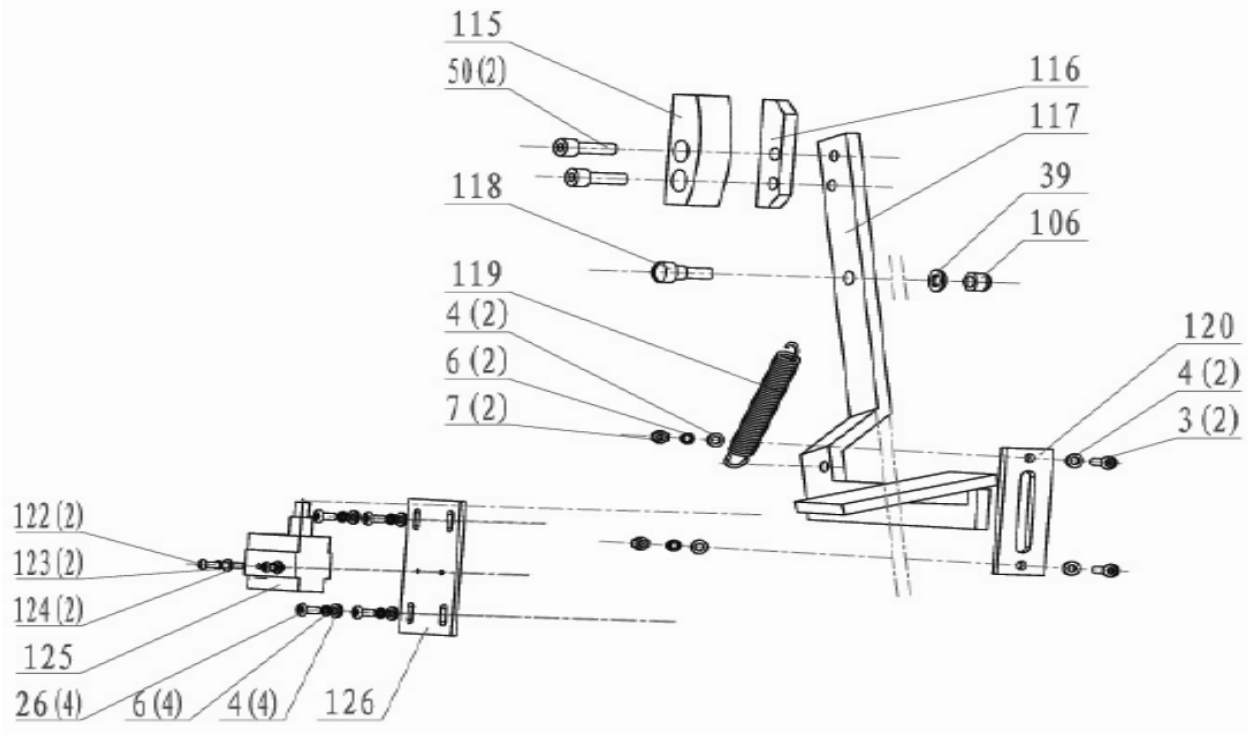
115
50(2)
116
117
118
39
106
119
4(2)
6(2)
7(2)
120
4(2)
3(2)
122(2)
123(2)
124(2)
125
26(4)
6(4)
4(4)
126

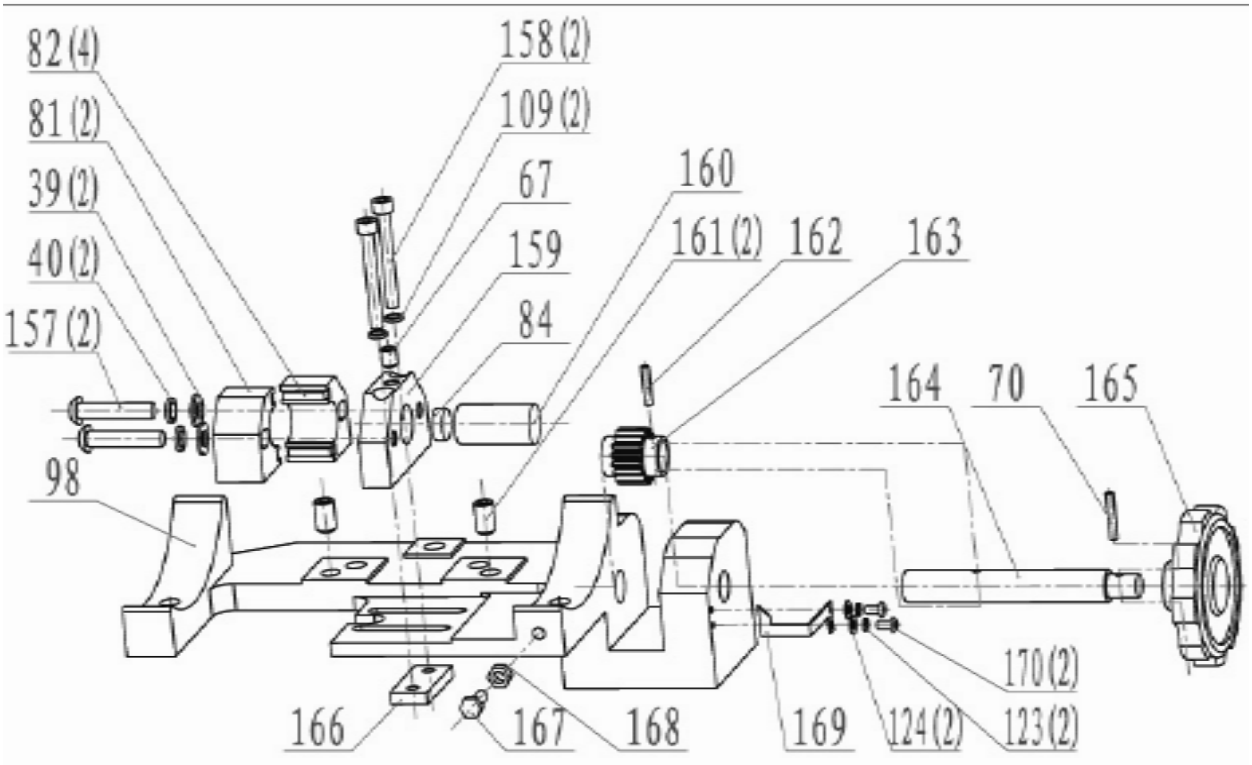
82(4)
158(2)
81(2)
109(2)
39(2)
67
160
40(2)
159
161(2)
162
163
157(2)
84
164
70
165
98
170(2)
166
167
168
169
124(2)
123(2)

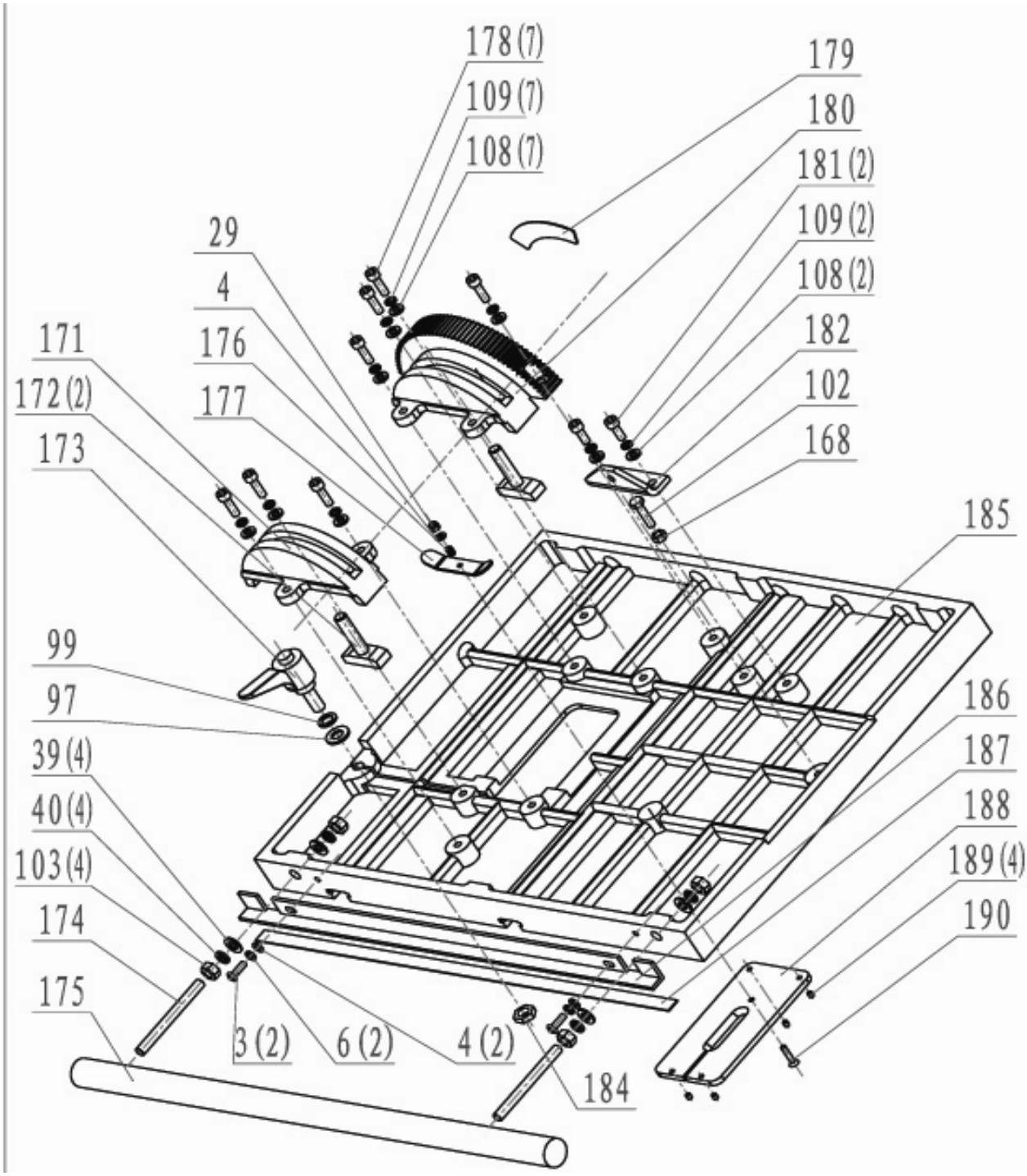
178 (7)
109 (7)
108 (7)
179
180
181 (2)
109 (2)
108 (2)
182
102
168
29
4
176
177
171
172 (2)
173
185
99
97
39 (4)
40 (4)
103 (4)
174
175
186
187
188
189 (4)
190
3 (2)
6 (2)
4 (2)
184

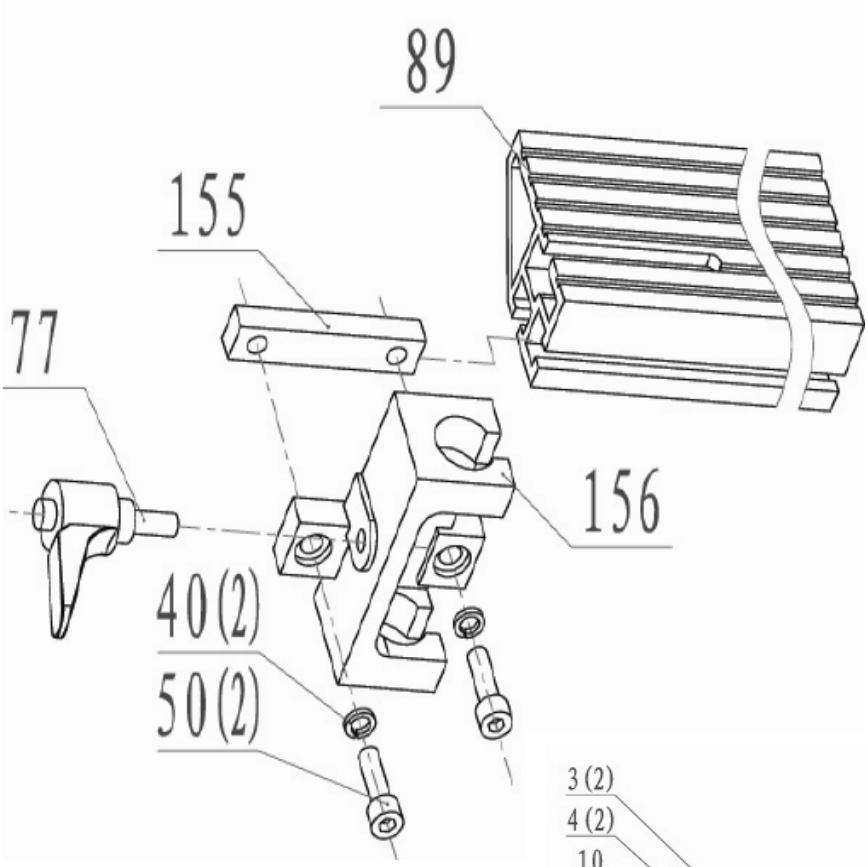
89
155
77
156
40(2)
50(2)

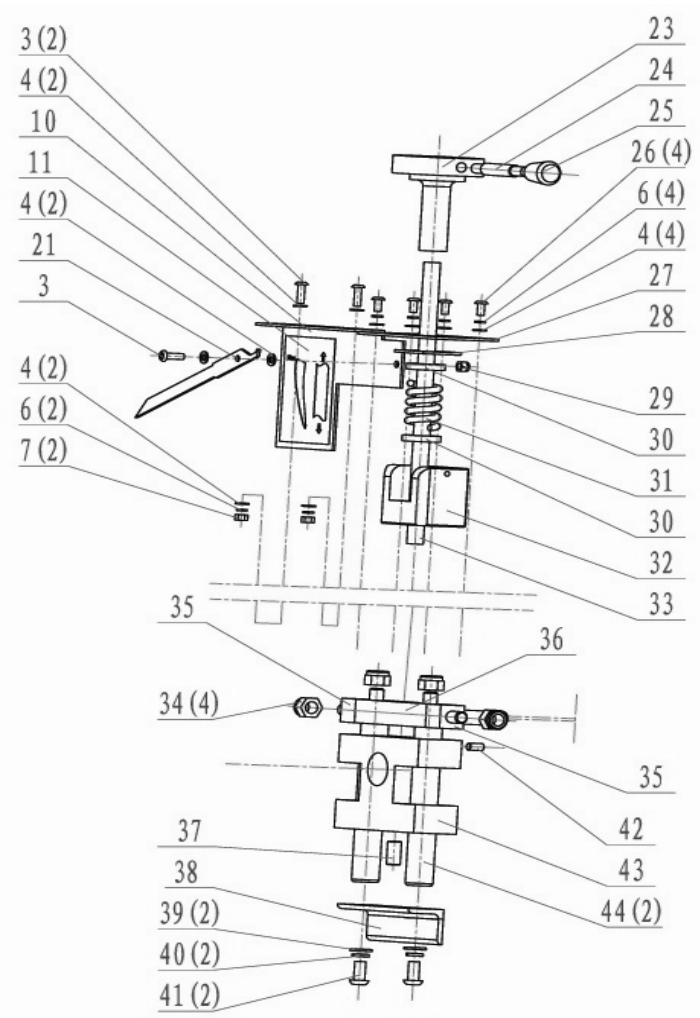
3 (2)
4 (2)
10
11
4 (2)
21
3
4 (2)
6 (2)
7 (2)
23
24
25
26 (4)
6 (4)
4 (4)
27
28
29
30
31
30
32
33
35
36
34 (4)
35
42
43
44 (2)
37
38
39 (2)
40 (2)
41 (2)

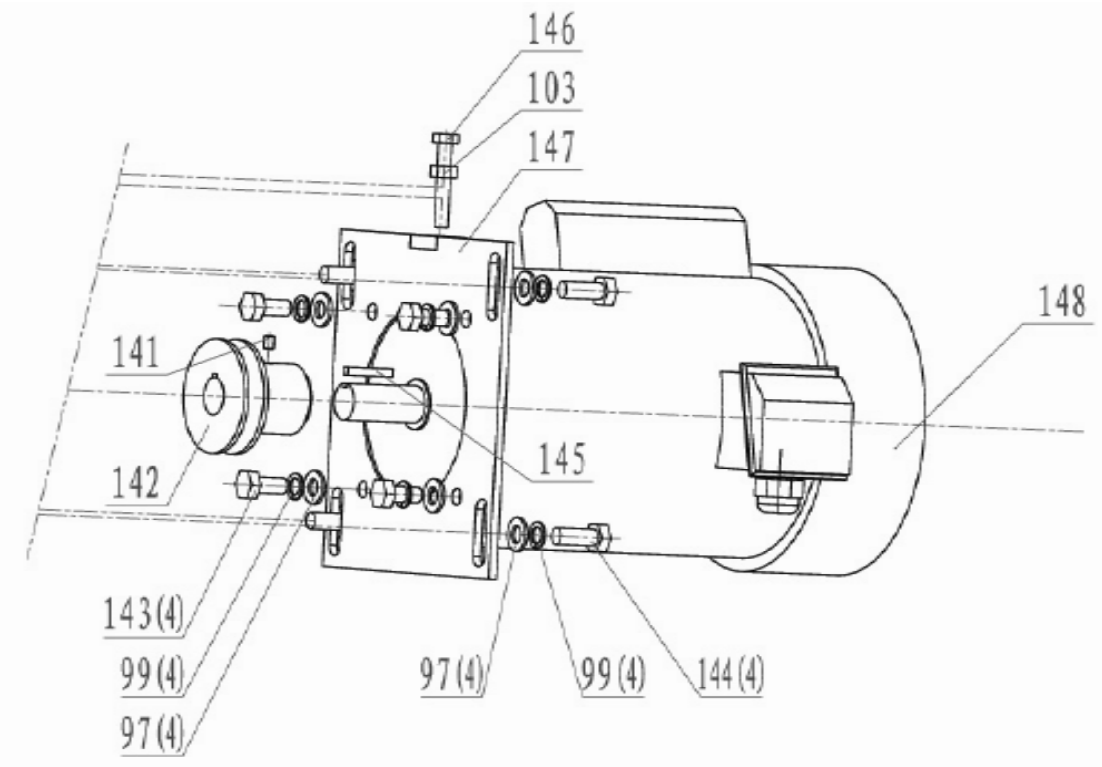
146
103
147
148
141
145
142
143(4)
99(4)
97(4)
97(4)
99(4)
144(4)

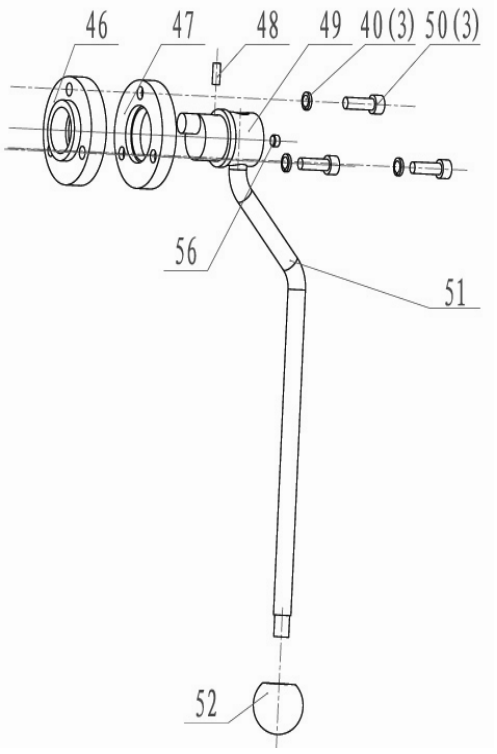
46
47
48
49
40(3)
50(3)
56
51
52

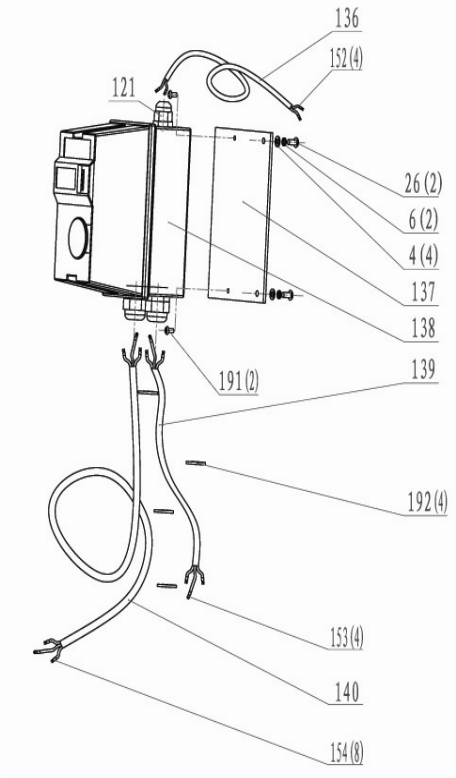
136
152(4)
121
26(2)
6(2)
4(4)
137
138
191(2)
139
192(4)
153(4)
140
154(8)

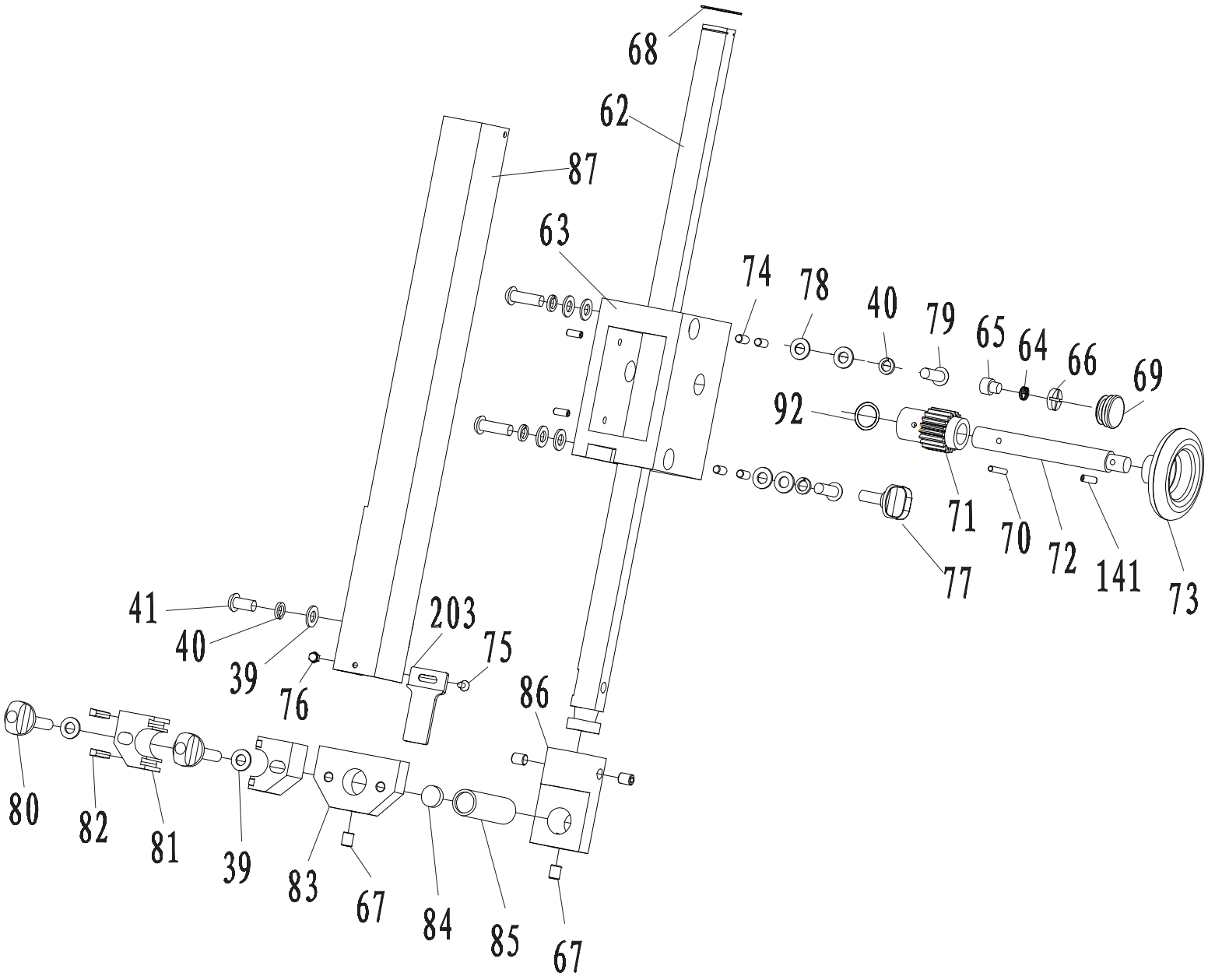
68
62
87
63
74
78
40
79
65
64
66
69
92
71
70
72
141
73
77
41
40
39
76
203
75
86
80
82
81
39
83
67
84
85
67

LIMITED WARRANTY

New woodworking machines sold by Laguna Tools carry a one-year warranty effective from the date of shipping. Laguna Tools guarantees all new machine sold to be free of manufacturers' defective workmanship, parts and materials. We will repair or replace, without charge, any parts determined by Laguna Tools, Inc. to be a manufacturer's defect. We require that the defective item/part be returned to Laguna Tools with the complaint. In the event the item/part is determined to be damaged due to lack of maintenance, cleaning or misuse/abuse, the customer will be responsible for the cost to replace the item/part, plus all related shipping charges. This limited warranty does not apply to natural disasters, acts of terrorism, normal wear and tear, product failure due to lack of maintenance or cleaning, damage caused by accident, neglect, lack of or inadequate dust collection, misuse/abuse or damage caused where repair or alterations have been made or attempted by others.

Laguna Tools, Inc. is not responsible for additional tools or modifications sold or performed (other than from/by Laguna Tools, Inc.) on any Laguna Tools, Inc. woodworking machine. Warranty maybe voided upon the addition of such described tools and/or modifications, determined on a case-by-case basis.

Normal user alignment, adjustment, tuning and machine settings are not covered by this warranty. It is the responsibility of the user to understand basic woodworking machinery settings and procedures and to properly maintain the equipment in accordance with the standards provided by the manufacturer.

Parts, under warranty, are shipped at Laguna Tools, Inc.'s cost either by common carrier, FEDEX ground service or a similar method. Technical support to install replacement parts is primarily provided by phone, fax, e-mail or Laguna Tools Customer Support Website. The labor required to install replacement parts is the responsibility of the user.

Laguna Tools is not responsible for damage or loss caused by a freight company or other circumstances not in our control. All claims for loss or damaged goods must be notified to Laguna Tools within twenty-four hours of delivery. Please contact our Customer Service Department for more information.

Only new machines sold to the original owner are covered by this warranty. For warranty repair information, call 1-800-332-4094.

Copyright 2010 Laguna Tools, Inc.
**Warning - no portion of these materials may be reproduced without written approval from Laguna Tools, Inc.