Gigabit Color IP Phone SIP-T38G

Future-proof IP Phone that combines GigE

- Dual-port Gigabit Ethernet, Power over Ethernet
- 4,3" TFT-LCD, 16.7M colors, Intuitive user interface
- TI Aries chipset and TI voice engine
- HD Voice: HD Codec, HD speaker, HD handset
- 6 VoIP accounts, BLF/BLA, IPv6, Open VPN
- Headset, Support Wireless Headset, LCD Expansion module

SIP-T38G IP Phone is Yealink latest innovation for managers with demanding collaborative communication needs. For managers, it is a future-proofing network investment which supports seamless migration to GigE-based network infrastructure. Dual-port Gigabit Ethernet is designed for flexible deployment options and lower cabling expenses. With its high-resolution TFT color display, The T38G IP Phone offers a brilliant depiction of caller's information, And the user interface was designed for clarity and intuitive operation. Moreover, Equipped with the TI Aries chipset, HD handset, HD speaker and HD codec (G.722), The T38G IP Phone offers an unrivaled,lifelike audio experience.

Additionally, T38G IP Phone includes full standard feature set of Yealink T28P Version 60

Yealink
easy VoIP

Gigabit Color IP Phone SIP-T38G

Phone Features

6 VoIP accounts, Hotline, Emergency call
Call hold, Call waiting, Call forward, Call return
Call transfer (blind/semi-attended/attended)
Caller ID display, Redial, Mute, DND
Auto-answer, 3-way conferencing
Speed dial, SMS, Voicemail
Message Waiting Indication (MWI) LED
Tone scheme, Volume control
Direct IP call without SIP proxy
Ring tone selection/import/delete
Phonebook (1000 entries), Black list
Call history: dialed/received/missed/forwarded
Menu-driven user interface
Localized language and input method
Soft keys programmable
Supports up to 6 expansion modules(EXP39)
Supports Wireless Headset Adapter(EHS36)

Advanced Features

XML phonebook search/import
LDAP phonebook
XML Idle Screen
Action URL & Active URI
Wallpaper, Screensaver
Color Picture Caller-ID
Theme, Screen Sleep mode

IP PBX System Integration

Busy lamp field (BLF), BLF list, (BLA)
DND & Forward synchronization
Intercom, Paging, Music on hold
Call park, Call pickup
Call recording, Call completion
Group listening, Group pickup
Anonymous call, Anonymous call rejection
Network conference
Distinctive ringtone
Dial Plan, Dial-now

Codecs and Voice Features

Wideband codec: G.722
Narrowband codec: G.711μ/A, G.723.1
G.726, G.729AB
VAD, CNG, AEC, PLC, AJB, AGC
Full-duplex speakerphone with AEC

Network Features

SIP v1 (RFC2543), v2 (RFC3261)
IPv6
DNS SRV (RFC3263)
Redundant server support
NAT Traversal: STUN mode
DTMF: In-Band, RFC2833, SIP Info
Proxy mode and peer-to-peer SIP link mode
IP Assignment: Static/DHCP/PPPoE
Bridge/router mode for PC port
TFTP/DHCP/PPPoE client
Telnet/HTTP/HTTPS server
DNS client, NAT/DHCP server
Logout

Management

Auto-provision via FTP/TFTP/HTTP/HTTPS
Auto-provision with PnP
SNMP V1/2 optional, TR069 optional
Configuration: browser/phone/auto-provision
Factory configuration customized
Trace package and system log export

Security

Open VPN, 802.1x, VLAN QoS (802.1pq), LLDP
Transport Layer Security (TLS)
HTTPS (server/client), SRTP (RFC3711)
Digest authentication using MD5/MD5-sess
Secure configuration file via AES encryption
Phone lock for personal privacy protection
Admin/VAR/User 3-level configuration mode

Physical Features

2xRJ45 10/100/1000Mbps Ethernet ports
TI Aries chipset
4.3" TFT-LCD, 480 x 272 pixel, 16.7M colors
48 keys including 16 programmable keys
1xRJ9 (4P4C) handset port
1xRJ9 (4P4C) headset port
1XRJ12 (6P6C) EXT port
Power adapter: AC 100~240V input and DC 5V/2A output
Power over Ethernet (IEEE 802.3af)
Power consumption approx.: 4.6W
Net weight: 1.05KG
Dimension: 273x204x42MM
Operating humidity: 10~95%
Storage temperature: up to 60°C

Package Features

Qty/CTN: 5 PCS
N.W/CTN: 8.065KG
G.W/CTN: 8.915KG
Measurement: 0.062CMB
Carton Meas: 580*295*250MM

Certifications

RoHS Compliant
ISO 9001
REACH

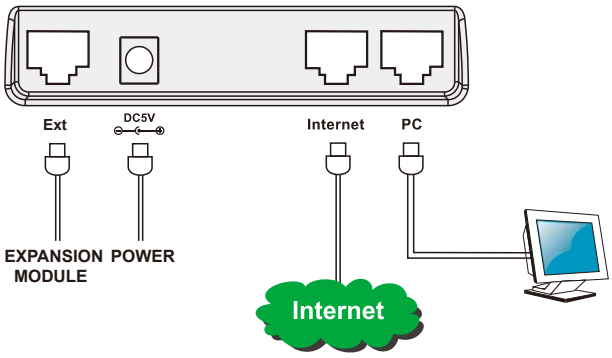

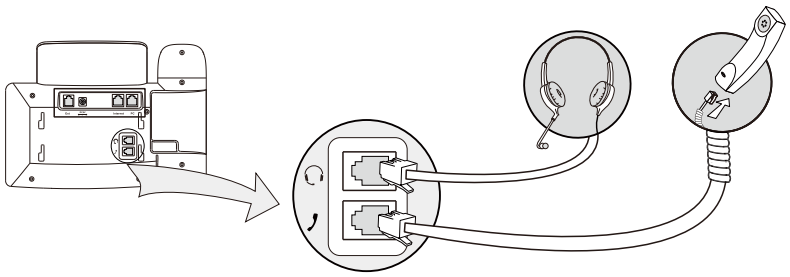

Yealink easy VoIP
Addr: 4th-5th Floor, South Building, No. 63 Wanghai Road, 2nd Software Park , Xiamen, China Website: www.yealink.com
Tel: +86-592-5702000 Email: sales@yealink.com