Enterprise HD IP Phone

SIP-T26P

Advanced IP Phone with 3 lines & HD voice

- TI TITAN chipset and TI voice engine
- 3 VoIP accounts, 132x64 graphic LCD
- HD Voice: HD Codec, HD speaker, HD handset
- IPV6, BLF, XML Browser, Hot-desking, OpenVPN
- 2xLAN, PoE, Headset, Expansion module

Yealink SIP-T26P is an advanced IP phone which designed for maximum productivity and efficiency in the everyday business environment. It is equipped with the TI TITAN chipset, offers high definition voice quality through TI voice engine, HD handset, HD speaker and HD codec (G.722).
Built-in 10 DSS keys for programmed as the IP-PBX features like BLF/BLA, intercom, call pickup, XML browser, Hot desking, etc. Six navigation keys and four soft keys help you to use the phone easily.
Ten dedicated functional keys provide you with direct access to the functions for audio and call control.
Moreover, SIP-T26P has the rich external interfaces including 2xLAN, PoE, headset and expansion module ports, supports 802.1x, Open VPN, etc security standards.

Yealink
easy VoIP

Enterprise HD IP Phone SIP-T26P

Phone Features

3 VoIP accounts, Hotline, Emergency call
Call hold, Call waiting, Call forward, Call return
Call transfer (blind/semi-attended/attended)
Caller ID display, Redial, Mute, DND
Auto-answer, 3-way conferencing
Speed dial, SMS, Voicemail
Message Waiting Indication (MWI) LED
Tone scheme, Volume control
Direct IP call without SIP proxy
Ring tone selection/import/delete
Phonebook (300 entries), Black list
Call history: dialed/received/missed/forwarded
Menu-driven user interface
Localized language and input method
Soft keys programmable
Supports up to 6 expansion modules(EXP38 and EXP39)
Supports Wireless Headset Adapter(EHS36)

Advanced Features

XML phonebook search/import
LDAP phonebook
XML Browser, Hot-desking
PUSH XML
Action URL & Active URI

IP PBX System Integration

Busy lamp field (BLF), BLF list
Bridged line appearance (BLA)
DND&Forward synchronization
Intercom, Paging, Music on hold
Call park, Call pickup
Call recording, Call completion
Group listening, Group pickup
Anonymous call, Anonymous call rejection
Network conference
Distinctive ringtone
Dial Plan, Dial-now

Codecs and Voice Features

Wideband codec: G.722
Narrowband codec: G.711μ/A, G.723.1
G.726, G.729AB
VAD, CNG, AEC, PLC, AJB, AGC
Full-duplex speakerphone with AEC

Network Features

SIP v1 (RFC2543), v2 (RFC3261)
IPV6
DNS SRV (RFC3263)
Redundant server support
NAT Traversal: STUN mode
DTMF: In-Band, RFC2833, SIP Info
Proxy mode and peer-to-peer SIP link mode
IP Assignment: Static/DHCP/PPPoE
Bridge/router mode for PC port
TFTP/DHCP/PPPoE client
Telnet/HTTP/HTTPS server
DNS client, NAT/DHCP server
Logout

Management

Auto-provision via FTP/TFTP/HTTP/HTTPS
Auto-provision with PnP
SNMP V1/2 optional, TR069 optional
Configuration: browser/phone/auto-provision
Factory configuration customized
Trace package and system log export

Security

Open VPN, 802.1x, VLAN QoS (802.1pq)
Transport Layer Security (TLS)
HTTPS (server/client), SRTP (RFC3711)
Digest authentication using MD5/MD5-sess
Secure configuration file via AES encryption
Phone lock for personal privacy protection
Admin/VAR/User 3-level configuration mode

Physical Features

TI TITAN chipset
132x64 graphic LCD
45 keys including 13 programmable keys
1xRJ9 (4P4C) handset port
1xRJ9 (4P4C) headset port
2xRJ45 10/100M Ethernet ports
1XRJ12 (6P6C) EXT port
Power adapter: AC 100~240V input and DC 5V/1.2A output
Power over Ethernet (IEEE 802.3af)
Power consumption: 1.6-2.6W
Net weight: 1.05KG
Dimension: 273x204x42MM
Operating humidity: 10~95%
Storage temperature: up to 60°C

Package Features

Qty/CTN: 5 PCS
N.W/CTN: 8.065KG
G.W/CTN: 8.915KG
Measurement: 0.062CMB
Carton Meas: 580x320x300MM

Certifications

RoHS Compliant
CE
FC
ISO 9001
REACH
MIC
BROADSOFT Technology Partner
Asterisk
AVAYA DevConnect Tested

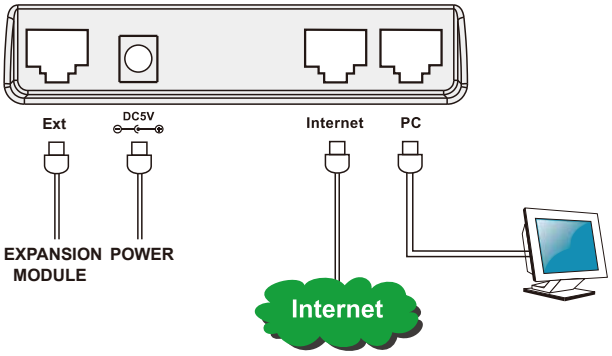

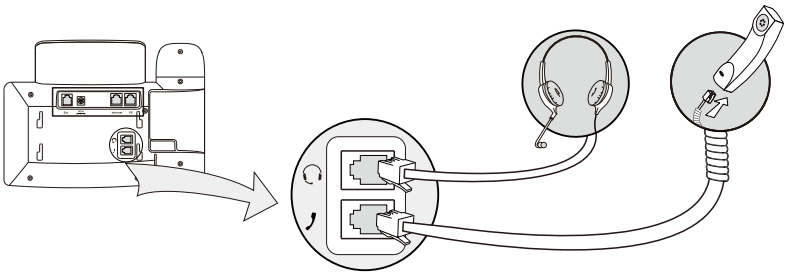

Yealink easy VoIP
Addr: 4th-5th Floor, South Building, No. 63 Wanghai Road, 2nd Software Park , Xiamen, China Website: www.yealink.com
Tel: +86-592-5702000 Email: sales@yealink.com