C05 – NIBE 2005/2025 air source heat pump with SMO10 controller, VPA tank-in-tank cylinder and electric boiler backup

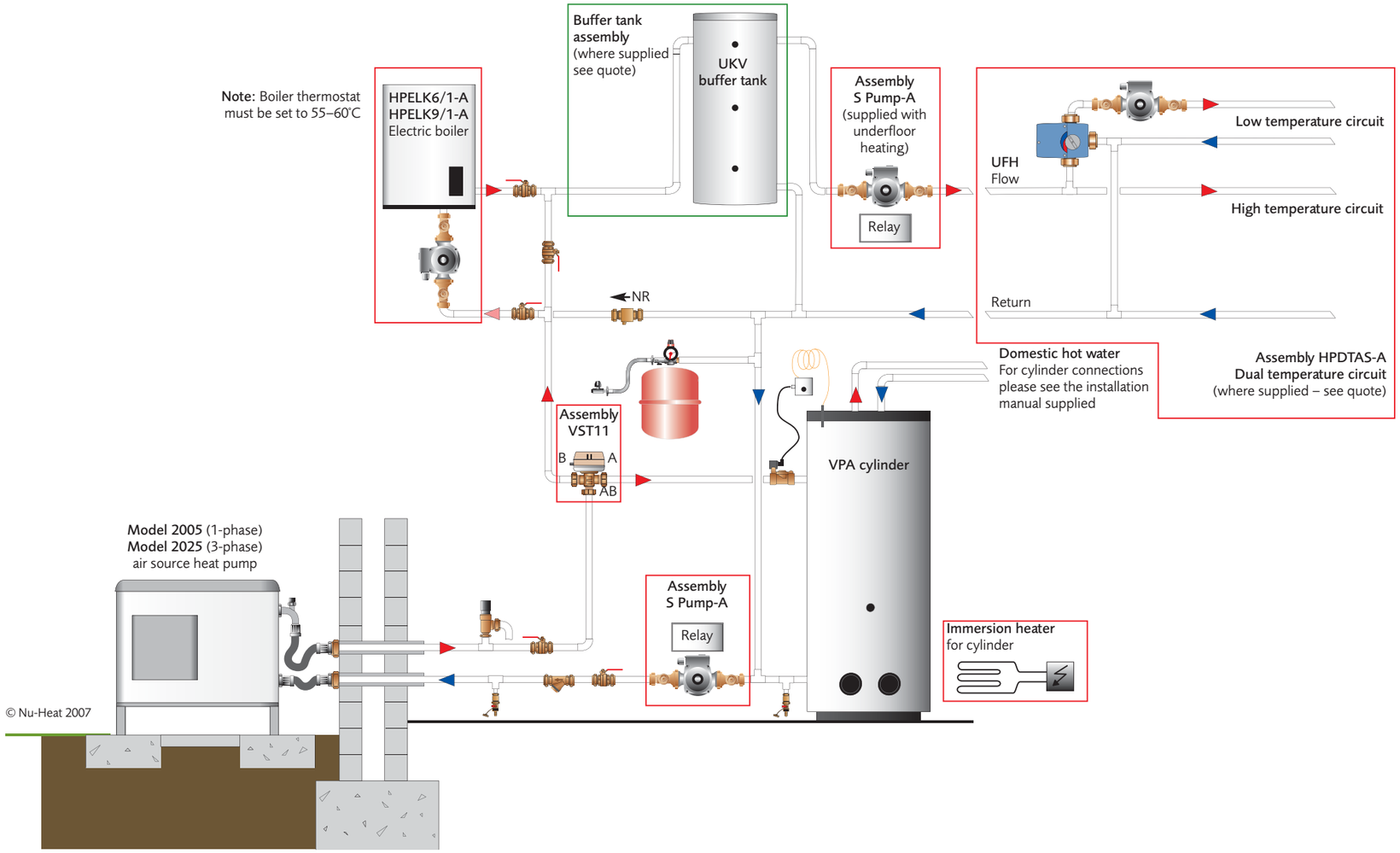

Nu-Heat
UNDERFLOOR & RENEWABLES
Heathpark House, Devonshire Road
Honiton, Devon EX14 1SD
Tel: 01404 549770
Fax: 01404 549771
Web: www.nu-heat.co.uk

design innovation expertise service

C05 – NIBE 2005/2025 air source heat pump with SMO10 controller, VPA tank-in-tank cylinder and electric boiler backup – electrical information

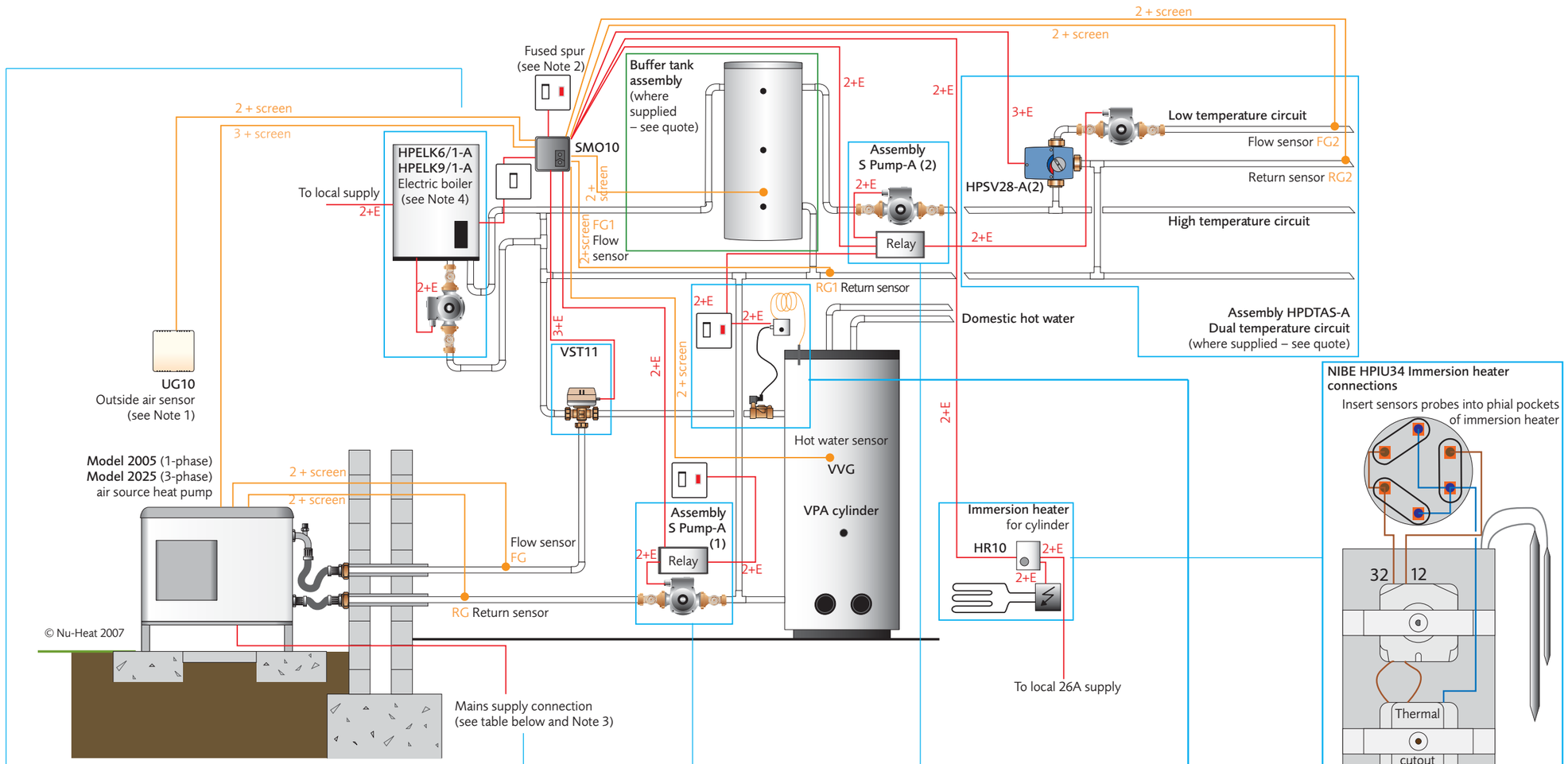

Electric boiler connections

Supply Connection Table		
Boiler type (refer to quote)	6kW	9kW
Max operating current	25A	39A
MCB size	32A	40A

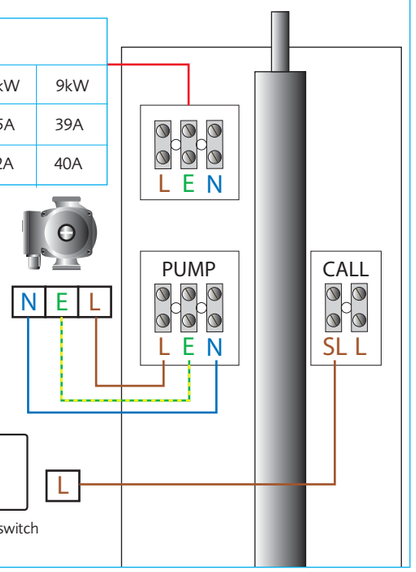

S Pump-A connections

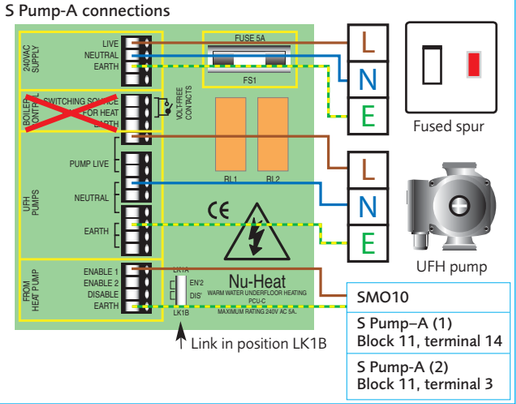

Supply Connection Table – MCB must be class 'D' rated			
	2005		2025
Heat pump type (refer to quote)	8kW	11kW	14kW
Max operating current	15A	21.5A	11A

Internal connections

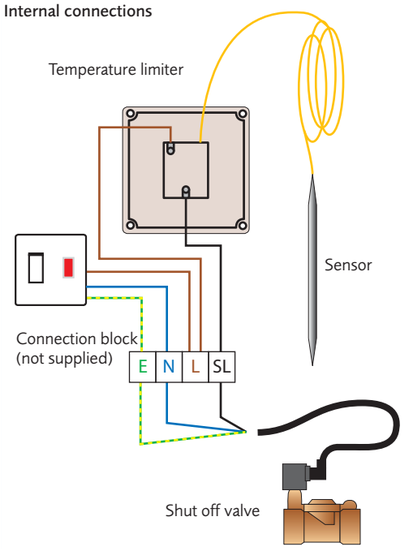

NIBE HPIU34 Immersion heater connections

Insert sensors probes into phial pockets of immersion heater

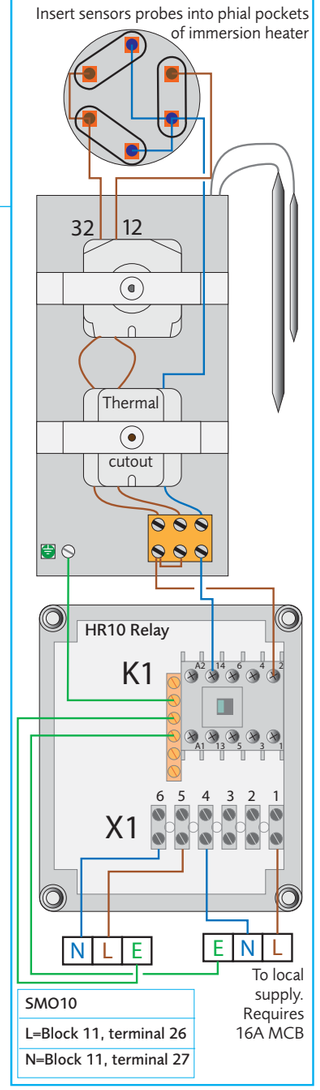

Mains voltage
Low voltage screened

2ND FIX INFORMATION

Peripheral	NIBE SMO10 – see note 3
UG10	Block 11, terminal 53, 54
VPA VVG	Block 11, terminals 43, 44
VST11	
Brown	Block 11, terminal 18
Blue	Block 11, terminal 19
Black	Block 11, terminal 17
HPSV28-A shunt valve (2)	
Y1	Block 11, terminal 30
Y2	Block 11, terminal 31
N	Block 11, terminal 32
Sensor FG1	Block 11, terminal 47, 48
Sensor RG1	Block 11, terminal 45, 46
Sensor FG2	Block 11, terminal 39, 40
Sensor RG2	Block 11, terminal 37, 38
NIBE 2005/2025 CPU card	
A+	Block 11, terminal 61
B-	Block 11, terminal 62
GND	Block 11, terminal 63

Notes:

1. Any outside temperature sensor must be installed away from sunlight in a shaded location on a north/northwest facing wall.
2. All fused spurs require a 5 amp fuse.
3. For location of terminal blocks and 2nd fix electrical connection of the heat pump, see NIBE Manual.
4. Boiler thermostat must be set to 55–60°C.

Nu-Heat
UNDERFLOOR & RENEWABLES
Heathpark House, Devonshire Road
Honiton, Devon EX14 1SD
Tel: 01404 549770
Fax: 01404 549771
Web: www.nu-heat.co.uk
design innovation expertise service

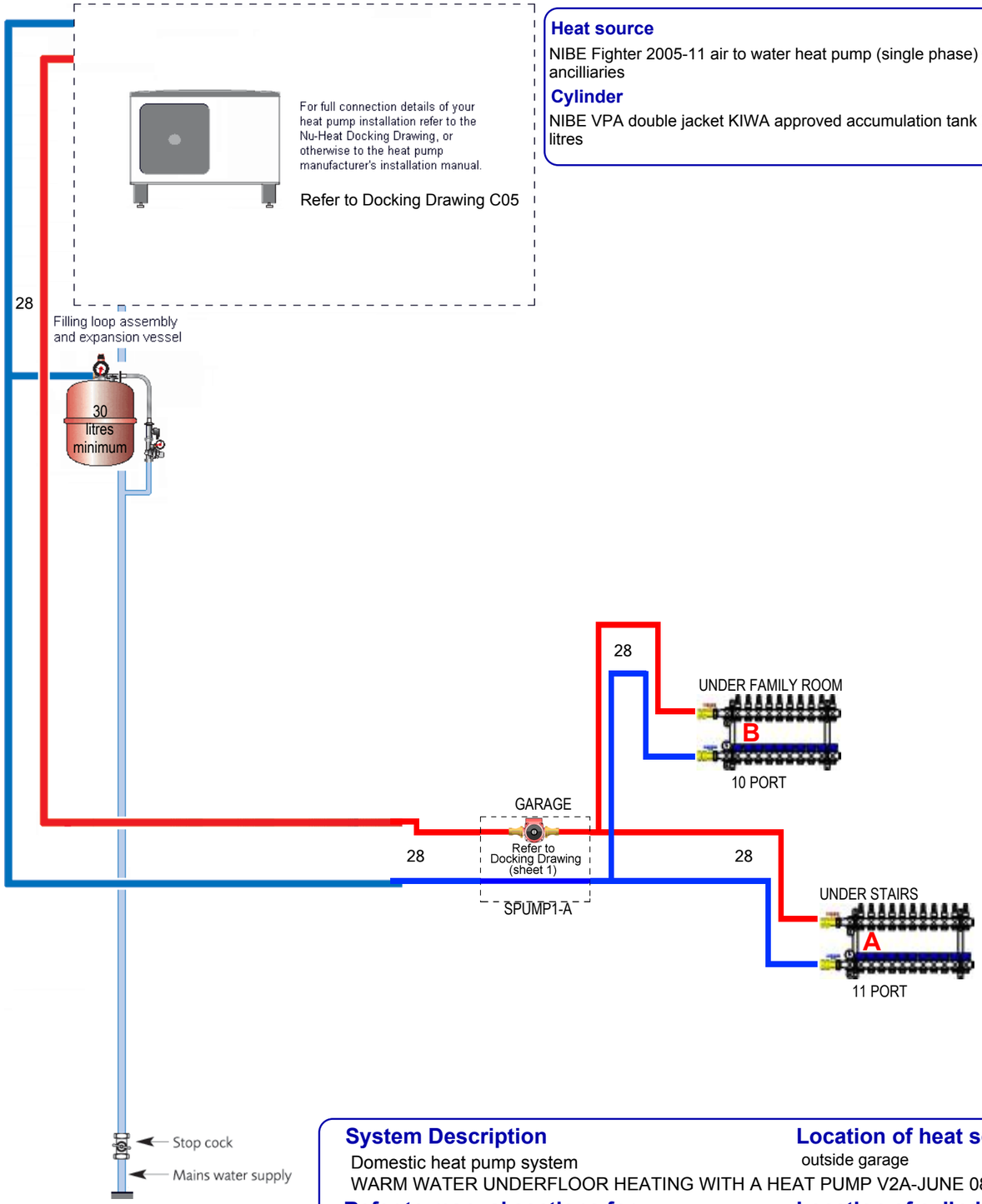

Heat source

NIBE Fighter 2005-11 air to water heat pump (single phase) with ancilliaries

Cylinder

NIBE VPA double jacket KIWA approved accumulation tank 300/200 litres

Manifold access dimensions, mm

Manifold	Ports	Allow height	Allow width including connectors	Allow depth
Optiflo A	11	600	795	95
Optiflo B	10	600	745	95

NOTES

These drawings should be read in conjunction with the installation manuals.

Nu-Heat advise that a towel rail should be used in each bathroom, en-suite & cloak room to maintain comfort levels.

Sizing the heat source

For heat pump sizing please refer to quotation.

Sizing the expansion vessel

The water content of the Nu-Heat system is 445 litres. An expansion vessel of minimum volume 30 litres should be fitted in the position illustrated on the Docking Drawing. Additional expansion will be required for any radiator circuit and also for any other heating-side installation not illustrated here. The sizing and fitting of any additional expansion vessel is the responsibility of others.

Distribution pipes

The distribution flow and return pipes are here shown sized and marked with their minimum outside diameter (OD), in millimetres, based on standard copper heating pipe dimensions.

Flow/return pipe sizing key

OD mm:	22	28	35	42
Max' flow:	22 L/m	45 L/m	67 L/m	>67 L/m

NU-HEAT

QR 73938

System Information

DATE: MAY 2009
DESIGNED: PS SHEET 3 OF 7

System Description

Domestic heat pump system
WARM WATER UNDERFLOOR HEATING WITH A HEAT PUMP V2A-JUNE 08 (WHITE)

Location of heat source

outside garage

Number of manifolds

2

Refer to manual sections for

Mains voltage standard dial thermostats.

Location of cylinder

garage

Number of pumps supplied

1

REVISION	DATE	DRAWN	DESCRIPTION	OPTI' A REV'N	OPTI' B REV'N

Nu-Heat
UNDERFLOOR & RENEWABLES
Heathpark House, Devonshire Road
Honiton, Devon EX14 1SD
Tel: 01404 549770
Fax: 01404 549771
Web: www.nu-heat.co.uk

WARM WATER UNDERFLOOR HEATING

design innovation expertise service

Mains voltage standard dial thermostats.

Thermostats should normally be fitted approximately at light switch height, out of direct sunlight or draughts and not above local heat sources such as towel rails.

Zone	1	2A	2B	3	4	5A	5B	6A	6B	6C	7
Rooms	WC Bathroom Ensuite	Bedroom 2	Bedroom 2	Entrance Hall	Study	Kitchen Utility Hall	Kitchen Utility Hall	Lounge	Lounge	Lounge	Bedroom 1
Thermostats: 3	No thermostat		Shared	No thermostat		No thermostat	No thermostat	No thermostat	No thermostat	No thermostat	
Actuators: 4	Open flow			Open flow		Open flow	Open flow	Open flow	Open flow	Open flow	
Coil qty	1	1	1	1	1	1	1	1	1	1	1
Coil length	70	90	90	50	80	60	60	90	90	90	60
Coil cut length	70	84	84	42	75	60	60	84	84	84	58
Flow setting	1.0	0.6	0.6	0.6	0.6	0.9	0.9	0.9	0.9	0.9	0.5

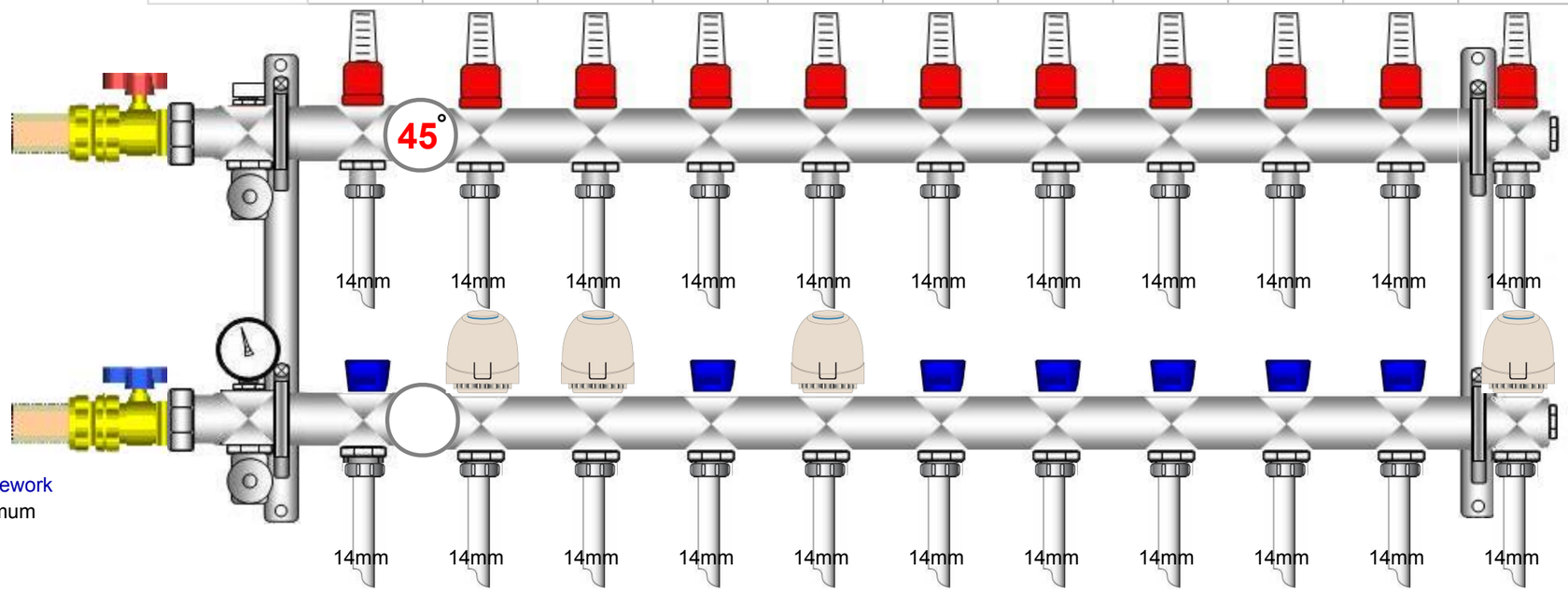

Local supply pipework
28mm OD minimum

Connection kit	ALE075/14-A	ALE075/14-A	ALE075/14-A	ALE075/14-A	ALE075/14-A	ALE075/14-A	ALE075/14-A	ALE075/14-A	ALE075/14-A	ALE075/14-A	ALE075/14-A

OPTIFLO A REVISION	DATE	DRAWN	DESCRIPTION

NOTES

Pump module for this manifold

The pump is NOT mounted on the manifold.

Pump type: SPUMP1-A
Location: Garage

Isolating valves

Supplied in manifold connection kit MCP-A, fit as illustrated to give isolation from the supply pipework.

Local pipework for supplying this manifold only

28mm OD minimum

Flow temperature 45 °C

Manifold flow rate 8.4 **litres/minute**

Wiring centre

OMWU1-C

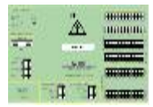

Controls

Mains voltage standard dial thermostats.

NU-HEAT

QR 73938

Manifold and Zone Information

GROUND FLOOR

Optiflo A **11 port**
Location: **Under Stairs**
DATE: MAY 2009
DESIGNED: PS SHEET 4 OF 7

Nu-Heat
UNDERFLOOR & RENEWABLES
Heathpark House, Devonshire Road
Honiton, Devon EX14 1SD
Tel: 01404 549770
Fax: 01404 549771
Web: www.nu-heat.co.uk

WARM WATER UNDERFLOOR HEATING

design innovation expertise service

Mains voltage standard dial thermostats.

Thermostats should normally be fitted approximately at light switch height, out of direct sunlight or draughts and not above local heat sources such as towel rails.

Zone	1	2A	2B	2C	3	4A	4B	5A	5B	5C		
Rooms	Ensuite 3	Bedroom 3	Bedroom 3	Bedroom 3	Ensuite 4	Bedroom 4	Bedroom 4	Family room	Family room	Family room		
Thermostats: 2	No thermostat		Shared	Shared	No thermostat		Shared	No thermostat	No thermostat	No thermostat		
Actuators: 5	Open flow				Open flow			Open flow	Open flow	Open flow		
Coil qty	1	1	1	1	1	1	1	1	1	1		
Coil length	80	80	80	80	50	70	70	90	90	90		
Coil cut length	73	78	78	78	46	69	69	90	90	90		
Flow setting	0.4	0.2	0.2	0.2	0.2	0.2	0.2	0.2	0.2	0.2		

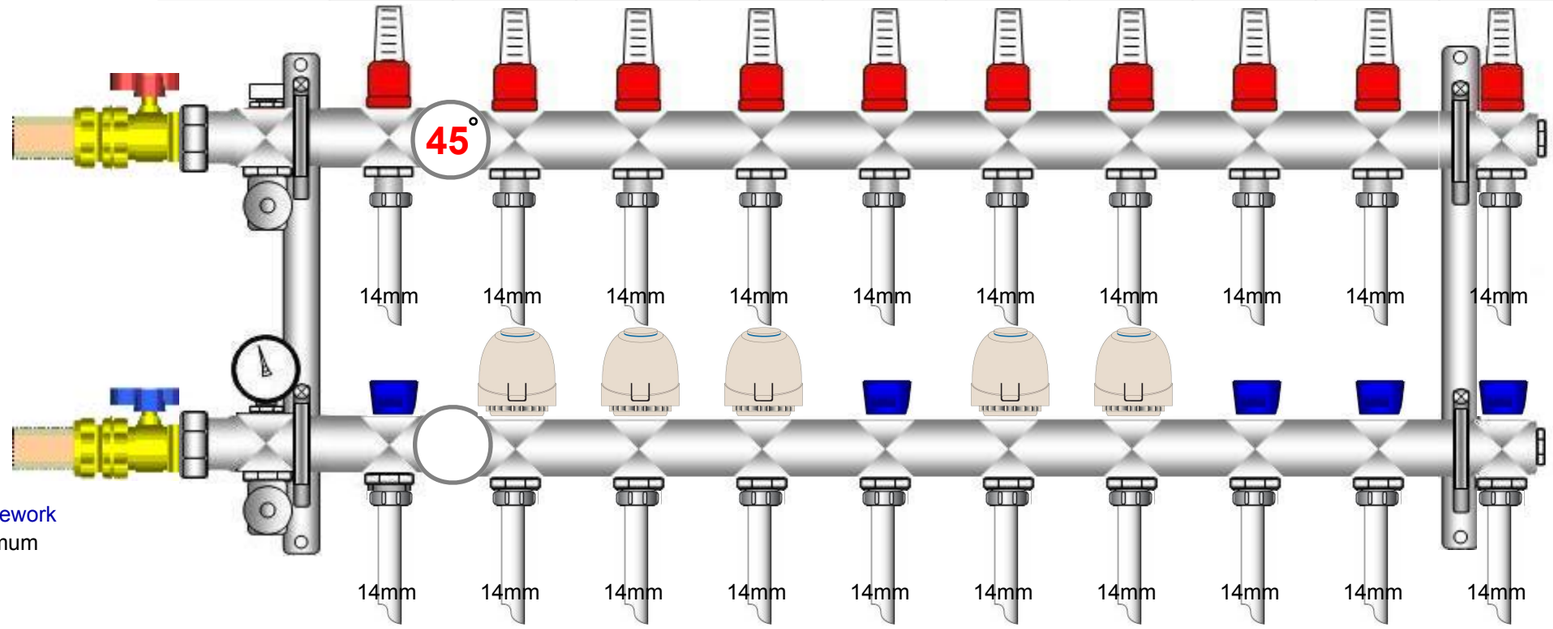

Local supply pipework
28mm OD minimum

Connection kit	ALE075/14-A	ALE075/14-A	ALE075/14-A	ALE075/14-A	ALE075/14-A	ALE075/14-A	ALE075/14-A	ALE075/14-A	ALE075/14-A	ALE075/14-A		

OPTIFLO B REVISION	DATE	DRAWN	DESCRIPTION

NOTES

Pump module for this manifold

The pump is NOT mounted on the manifold.

Pump type: SPUMP1-A
Location: Garage

Isolating valves

Supplied in manifold connection kit MCP-A, fit as illustrated to give isolation from the supply pipework.

Local pipework for supplying this manifold only

28mm OD minimum

Flow temperature 45 °C

Manifold flow rate 2.2 **litres/minute**

Wiring centre

OMWU1-C

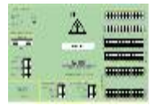

Controls

Mains voltage standard dial thermostats.

NU-HEAT

QR 73938

Manifold and Zone Information

FIRST FLOOR

Optiflo B **10 port**

Location: **Under Family Room**

DATE: MAY 2009

DESIGNED: PS SHEET 5 OF 7

Nu-Heat
UNDERFLOOR & RENEWABLES
Heathpark House, Devonshire Road
Honiton, Devon EX14 1SD
Tel: 01404 549770
Fax: 01404 549771
Web: www.nu-heat.co.uk

WARM WATER UNDERFLOOR HEATING

design innovation expertise service

Optiflo A/ZONE 1/PORT 1
WC, Bathroom, Ensuite SL14, SL14, SL14
Heating tube: 14mm (1 x 70m)
Cut length: 70 metres
Tube spacing: 200mm
150mm
150mm
Minimum flow setting: 1 Litres/min

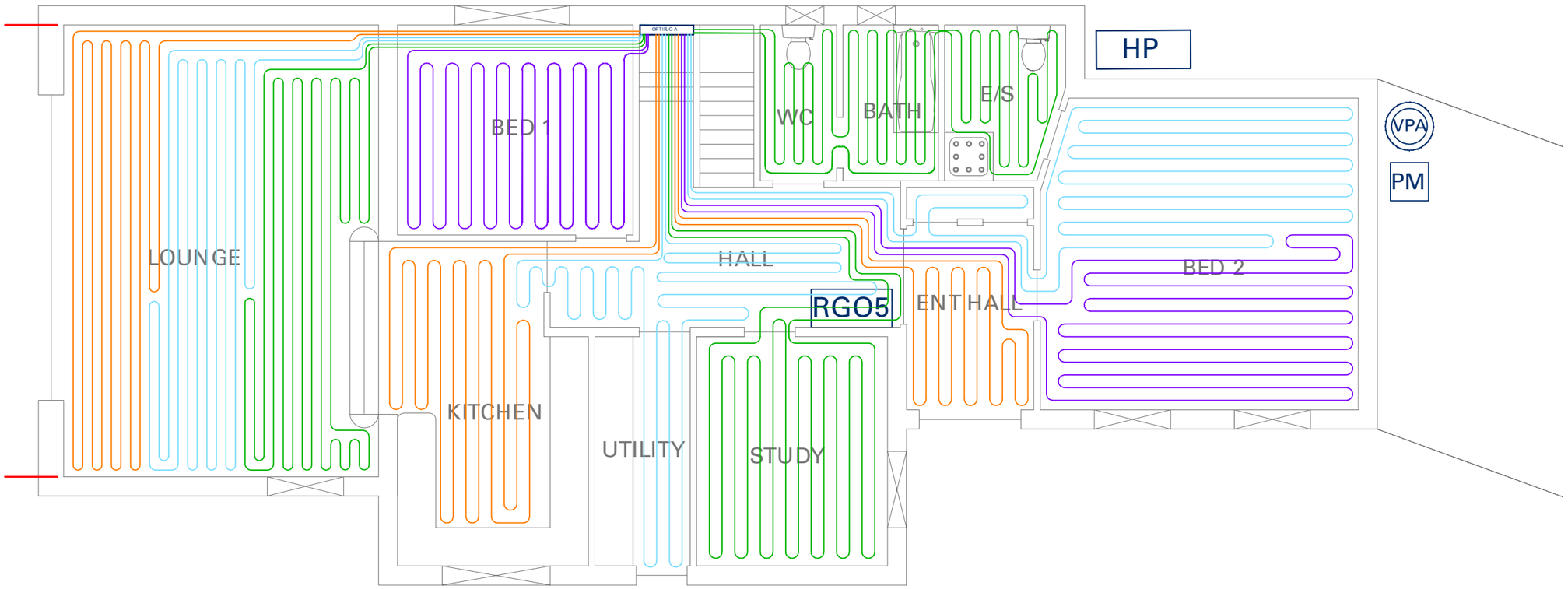

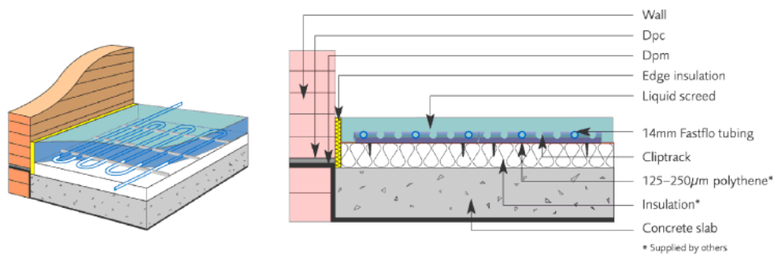

SL14 – Fastflo-14™ in liquid screed with cliptrack

INSTALLATION SCHEDULE

Optiflo A/ZONE 2/PORTS 2,3
Bedroom 2 SL14
Heating tube: 14mm (2 x 90m)
Cut length: 84 metres
Tube spacing: 200mm
Min' flow setting per port: 0.6 Litres/min

Optiflo A/ZONE 3/PORT 4
Entrance Hall SL14
Heating tube: 14mm (1 x 50m)
Cut length: 42 metres
Tube spacing: 200mm
Minimum flow setting: 0.6 Litres/min

Optiflo A/ZONE 4/PORT 5
Study SL14
Heating tube: 14mm (1 x 80m)
Cut length: 75 metres
Tube spacing: 200mm
Minimum flow setting: 0.6 Litres/min

Optiflo A/ZONE 5/PORTS 6,7
Kitchen, Utility, Hall SL14, SL14, SL14
Heating tube: 14mm (2 x 60m)
Cut length: 60 metres
Tube spacing: 200mm
200mm
200mm
Min' flow setting per port: 0.9 Litres/min

Optiflo A/ZONE 6/PORTS 8,9,10
Lounge SL14
Heating tube: 14mm (3 x 90m)
Cut length: 84 metres
Tube spacing: 150mm
Min' flow setting per port: 0.9 Litres/min

Optiflo A/ZONE 7/PORT 11
Bedroom 1 SL14
Heating tube: 14mm (1 x 60m)
Cut length: 58 metres
Tube spacing: 200mm
Minimum flow setting: 0.5 Litres/min

NU-HEAT

QR73938

TUBE LAYOUT

SCALE : 1:75		DATE: MAY 2009
DRAWN : PS	DES : PS	SHEET 6 OF 7

Nu-Heat
UNDERFLOOR & RENEWABLES
Heathpark House, Devonshire Road
Honiton, Devon EX14 1SD
Tel: 01404 549770
Fax: 01404 549771
Web: www.nu-heat.co.uk

WARM WATER UNDERFLOOR HEATING

design innovation expertise service

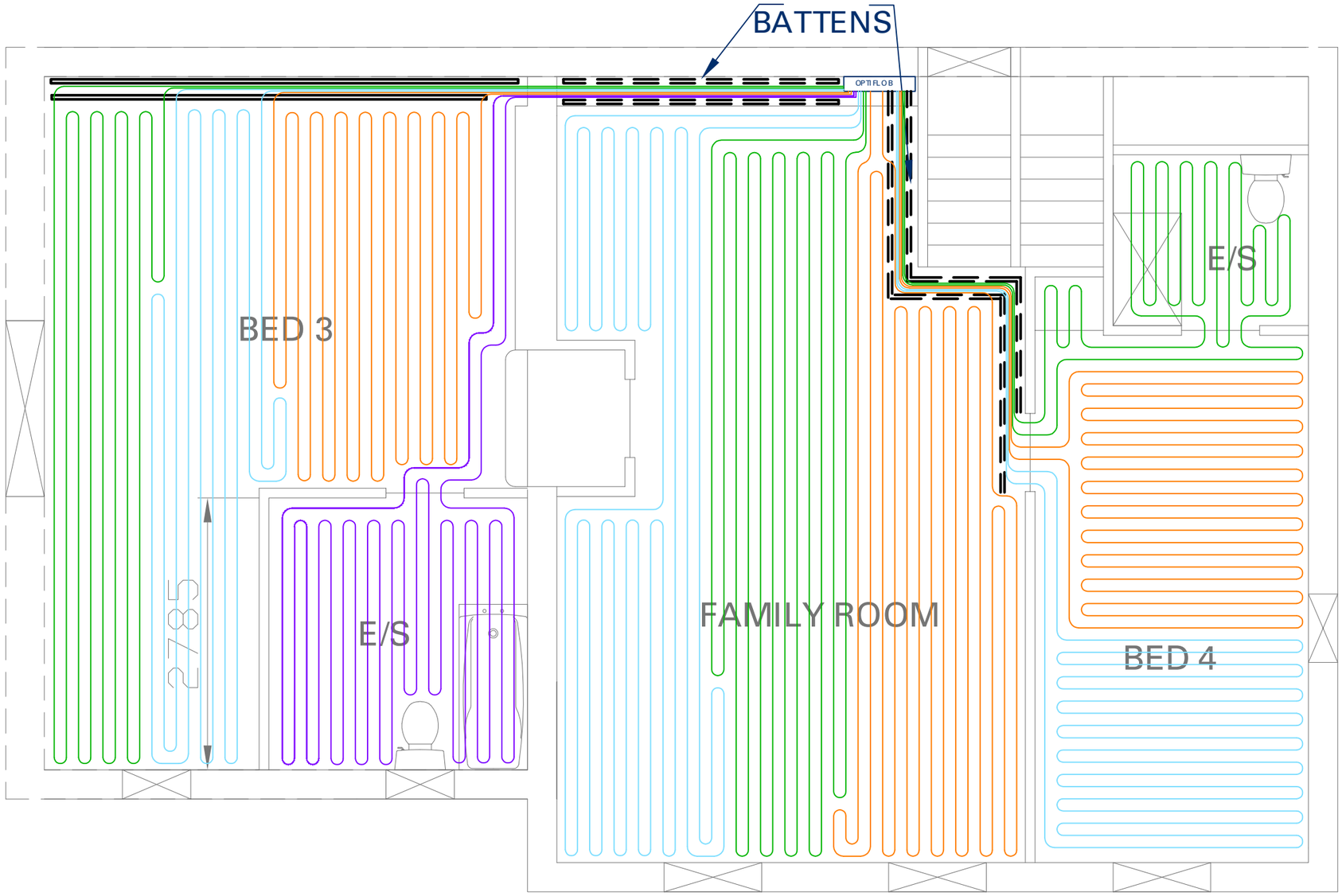

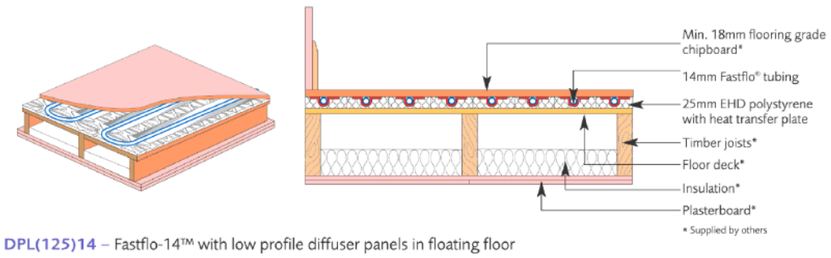

DPL(125)14 – Fastflo-14™ with low profile diffuser panels in floating floor

INSTALLATION SCHEDULE

Optiflo B/ZONE 1/PORT 1
Ensuite 3 DPL(125)14
Heating tube: 14mm (1 x 80m)
Cut length: 73 metres
Tube spacing: 125mm
Minimum flow setting: 0.4 Litres/min

Optiflo B/ZONE 2/PORTS 2,3,4
Bedroom 3 DPL(125)14
Heating tube: 14mm (3 x 80m)
Cut length: 78 metres
Tube spacing: 125mm
Min' flow setting per port: 0.2 Litres/min

Optiflo B/ZONE 3/PORT 5
Ensuite 4 DPL(125)14
Heating tube: 14mm (1 x 50m)
Cut length: 46 metres
Tube spacing: 125mm
Minimum flow setting: 0.2 Litres/min

Optiflo B/ZONE 4/PORTS 6,7
Bedroom 4 DPL(125)14
Heating tube: 14mm (2 x 70m)
Cut length: 69 metres
Tube spacing: 125mm
Min' flow setting per port: 0.2 Litres/min

Optiflo B/ZONE 5/PORTS 8,9,10
Family room DPL(125)14
Heating tube: 14mm (3 x 90m)
Cut length: 90 metres
Tube spacing: 125mm
Min' flow setting per port: 0.2 Litres/min

NU-HEAT

QR73938

TUBE LAYOUT

SCALE : 1:50	DATE: MAY 2009	
DRAWN : PS	DES : PS	SHEET 7 OF 7

Nu-Heat
UNDERFLOOR & RENEWABLES
Heathpark House, Devonshire Road
Honiton, Devon EX14 1SD
Tel: 01404 549770
Fax: 01404 549771
Web: www.nu-heat.co.uk

WARM WATER UNDERFLOOR HEATING

design | innovation | expertise | service